HPCA 2023 Tutorial

Real-world Processing-in-Memory Architectures

Processing-Near-Memory

Real PNM Architectures

Programming General-purpose PIM

Dr. Juan Gómez Luna

Professor Onur Mutlu

ETH Zürich

SAFARI

Sunday, February 26, 2023

Two PIM Approaches

5.2. Two Approaches: Processing Using Memory (PUM) vs. Processing Near Memory (PNM)

Many recent works take advantage of the memory technology innovations that we discuss in Section 5.1 to enable and implement PIM. We find that these works generally take one of two approaches, which are categorized in Table 1: (1) *processing using memory* or (2) *processing near memory*. We briefly describe each approach here. Sections 6 and 7 will provide example approaches and more detail for both.

Table 1: Summary of enabling technologies for the two approaches to PIM used by recent works. Adapted from [341] and extended.

Approach	Example Enabling Technologies
Processing Using Memory	SRAM DRAM Phase-change memory (PCM) Magnetic RAM (MRAM) Resistive RAM (RRAM)/memristors
Processing Near Memory	Logic layers in 3D-stacked memory Silicon interposers Logic in memory controllers Logic in memory chips (e.g., near bank) Logic in memory modules Logic near caches Logic near/in storage devices

Onur Mutlu, Saugata Ghose, Juan Gomez-Luna, and Rachata Ausavarungnirun,
"A Modern Primer on Processing in Memory"
Invited Book Chapter in ***Emerging Computing: From Devices to Systems - Looking Beyond Moore and Von Neumann***, Springer, to be published in 2021.
[Tutorial Video on "Memory-Centric Computing Systems" (1 hour 51 minutes)]

PIM Becomes Real

- UPMEM, founded in January 2015, announces the first real-world PIM architecture in 2016
- UPMEM's PIM-enabled DIMMs start getting commercialized in 2019

- In early 2021, Samsung announces FIMDRAM at ISSCC conference
- Samsung's LP-DDR5 and DIMM-based PIM announced a few months later

- In early 2022, SK Hynix announces AiM and Alibaba announces HB-PNM at ISSCC conference

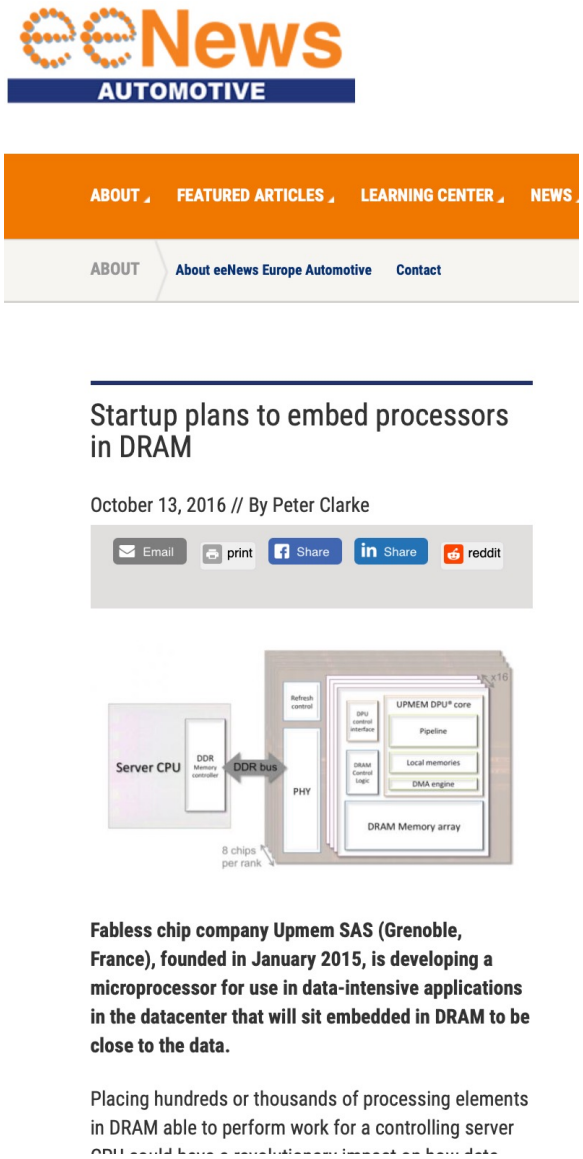

https://www.eenewsautomotive.com/news/startup-plans-embed-processors-dram-0#

UPMEM PIM

UPMEM Processing-in-DRAM Engine (2019)

- Processing in DRAM Engine
- Includes **standard DIMM modules**, with a **large number of DPU processors** combined with DRAM chips.

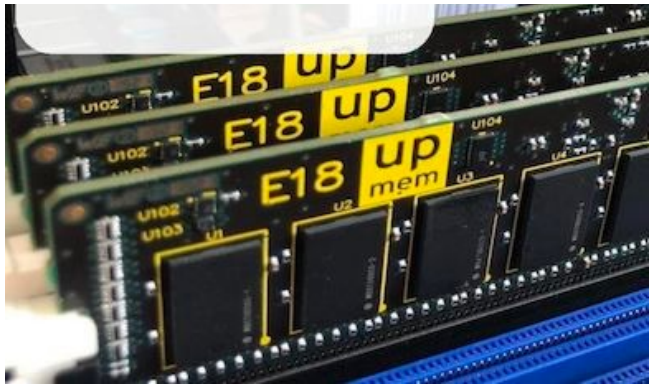

- Replaces **standard** DIMMs
  - DDR4 R-DIMM modules
    - 8GB+128 DPUs (16 PIM chips)
    - Standard 2x-nm DRAM process
  - **Large amounts of** compute & memory bandwidth

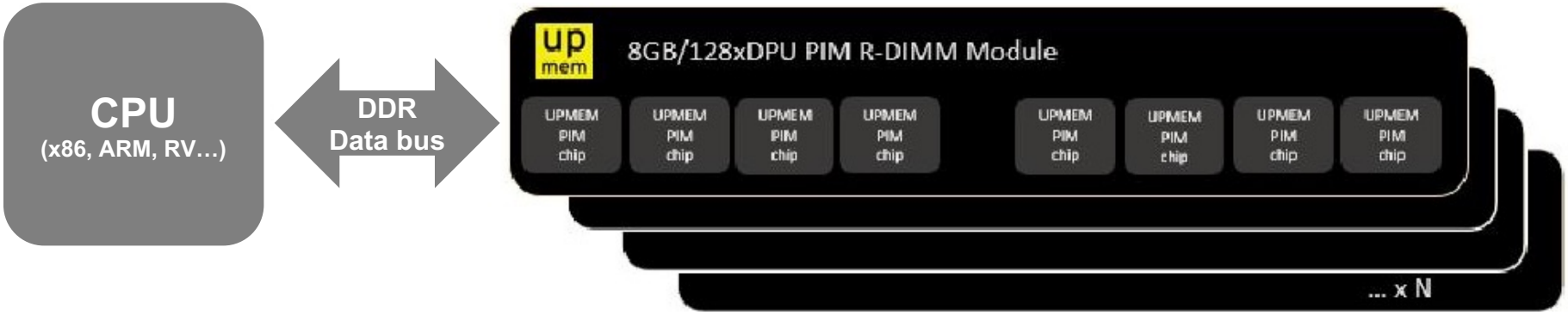

https://www.anandtech.com/show/14750/hot-chips-31-analysis-inmemory-processing-by-upmem
https://www.upmem.com/video-upmem-presenting-its-true-processing-in-memory-solution-hot-chips-2019/

UPMEM DIMMs

- E19: 8 chips/DIMM (1 rank). DPUs @ 267 MHz
- P21: 16 chips/DIMM (2 ranks). DPUs @ 350 MHz

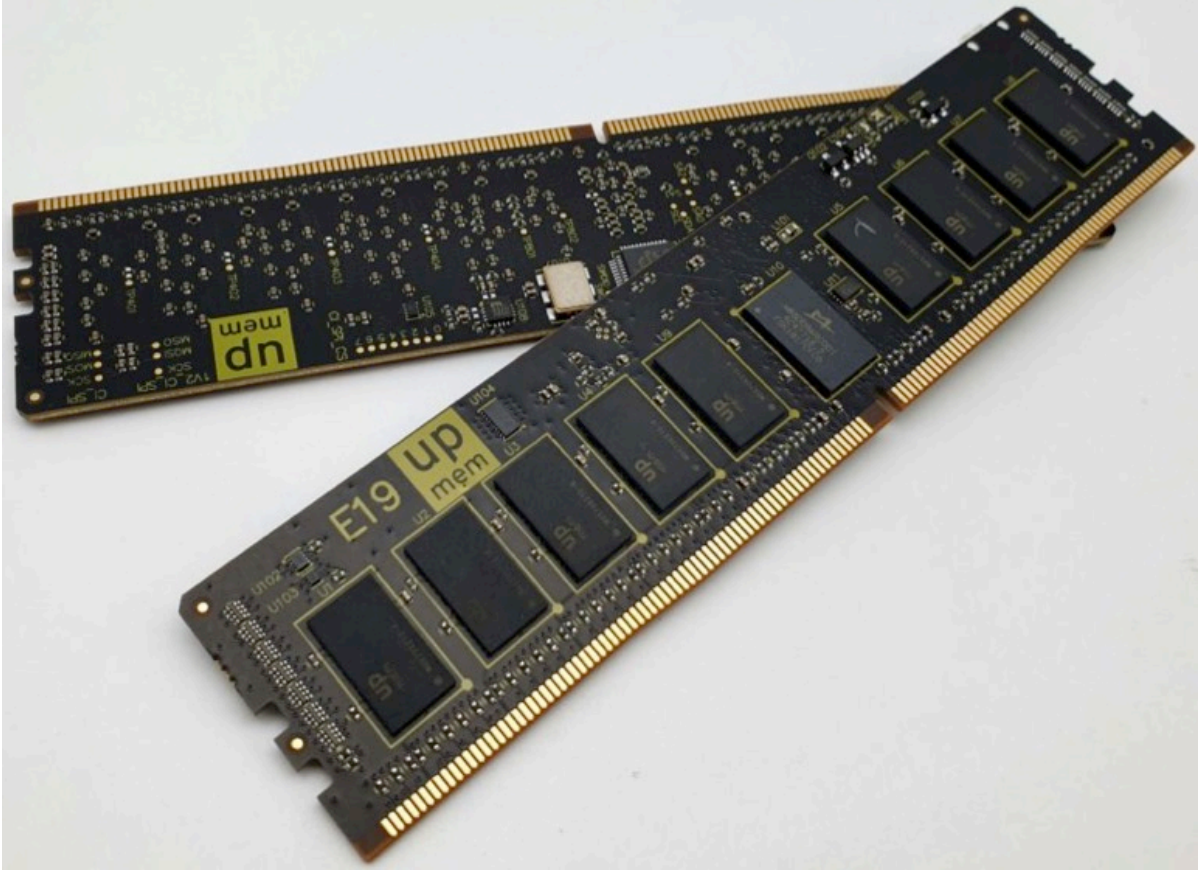

2,560-DPU Processing-in-Memory System

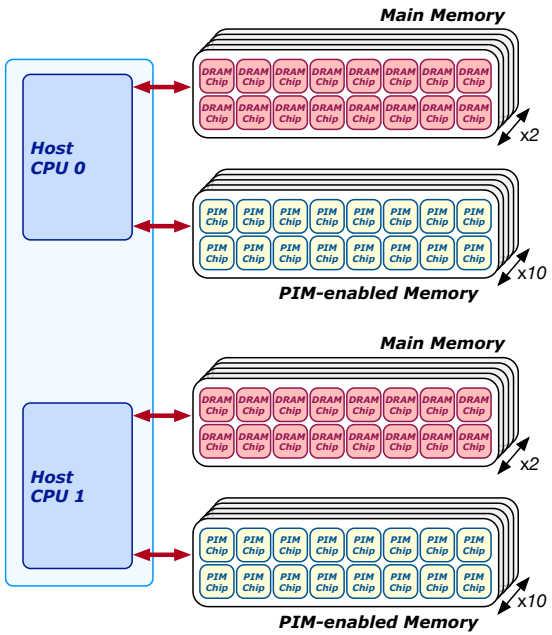

Benchmarking a New Paradigm: An Experimental Analysis of a Real Processing-in-Memory Architecture

JUAN GÓMEZ-LUNA, ETH Zürich, Switzerland
IZZAT EL HAJJ, American University of Beirut, Lebanon
IVAN FERNANDEZ, ETH Zürich, Switzerland and University of Malaga, Spain
CHRISTINA GIANNOULA, ETH Zürich, Switzerland and NTUA, Greece
GERALDO F. OLIVEIRA, ETH Zürich, Switzerland
ONUR MUTLU, ETH Zürich, Switzerland

Many modern workloads, such as neural networks, databases, and graph processing, are fundamentally memory-bound. For such workloads, the data movement between main memory and CPU cores imposes a significant overhead in terms of both latency and energy. A major reason is that this communication happens through a narrow bus with high latency and limited bandwidth, and the low data reuse in memory-bound workloads is insufficient to amortize the cost of main memory access. Fundamentally addressing this *data movement bottleneck* requires a paradigm where the memory system assumes an active role in computing by integrating processing capabilities. This paradigm is known as *processing-in-memory* (*PIM*).

Recent research explores different forms of PIM architectures, motivated by the emergence of new 3D-stacked memory technologies that integrate memory with a logic layer where processing elements can be easily placed. Past works evaluate these architectures in simulation or, at best, with simplified hardware prototypes. In contrast, the UPMEM company has designed and manufactured the first publicly-available real-world PIM architecture. The UPMEM PIM architecture combines traditional DRAM memory arrays with general-purpose in-order cores, called *DRAM Processing Units* (*DPUs*), integrated in the same chip.

This paper provides the first comprehensive analysis of the first publicly-available real-world PIM architecture. We make two key contributions. First, we conduct an experimental characterization of the UPMEM-based PIM system using microbenchmarks to assess various architecture limits such as compute throughput and memory bandwidth, yielding new insights. Second, we present *PrIM* (*Processing-In-Memory benchmarks*), a benchmark suite of 16 workloads from different application domains (e.g., dense/sparse linear algebra, databases, data analytics, graph processing, neural networks, bioinformatics, image processing), which we identify as memory-bound. We evaluate the performance and scaling characteristics of PrIM benchmarks on the UPMEM PIM architecture, and compare their performance and energy consumption to their state-of-the-art CPU and GPU counterparts. Our extensive evaluation conducted on two real UPMEM-based PIM systems with 640 and 2,556 DPUs provides new insights about suitability of different workloads to the PIM system, programming recommendations for software designers, and suggestions and hints for hardware and architecture designers of future PIM systems.

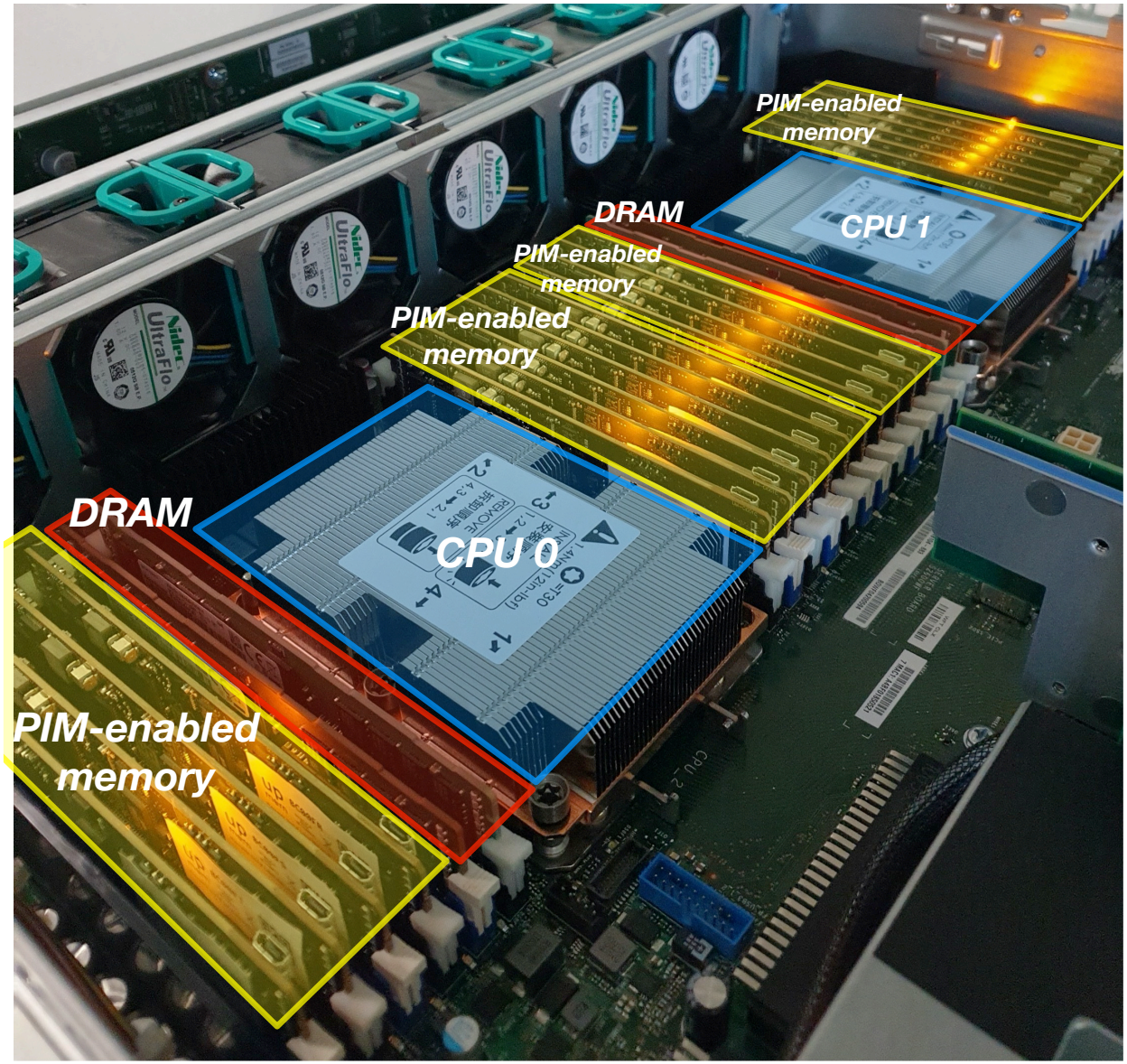

Understanding a Modern PIM Architecture

Benchmarking a New Paradigm: Experimental Analysis and Characterization of a Real Processing-in-Memory System

JUAN GÓMEZ-LUNA[1], IZZAT EL HAJJ[2], IVAN FERNANDEZ[1,3], CHRISTINA GIANNOULA[1,4], GERALDO F. OLIVEIRA[1], AND ONUR MUTLU[1]

[1]ETH Zürich
[2]American University of Beirut
[3]University of Malaga
[4]National Technical University of Athens

Corresponding author: Juan Gómez-Luna (e-mail: juang@ethz.ch).

https://arxiv.org/pdf/2105.03814.pdf

https://github.com/CMU-SAFARI/prim-benchmarks

UPMEM Patent

(12) **United States Patent**
Devaux et al.

(10) **Patent No.: US 10,324,870 B2**
(45) **Date of Patent: Jun. 18, 2019**

(54) **MEMORY CIRCUIT WITH INTEGRATED PROCESSOR**

(71) Applicant: **UPMEM**, Grenoble (FR)

(72) Inventors: **Fabrice Devaux**, La Conversion (CH); **Jean-François Roy**, Grenoble (FR)

(73) Assignee: **UPMEM**, Grenoble (FR)

(*) Notice: Subject to any disclaimer, the term of this patent is extended or adjusted under 35 U.S.C. 154(b) by 0 days.

(21) Appl. No.: **15/551,418**

(22) PCT Filed: **Feb. 12, 2016**

(56) **References Cited**

U.S. PATENT DOCUMENTS

5,666,485	A *	9/1997	Suresh	G06F 13/1605 710/113
6,463,001	B1	10/2002	Williams	
7,349,277	B2 *	3/2008	Kinsley	G11C 11/406 365/193
8,438,358	B1 *	5/2013	Kraipak	G11C 7/04 711/167

(Continued)

FOREIGN PATENT DOCUMENTS

EP	0780768	A1	6/1997
JP	H03109661	A	5/1991
WO	2010/141221	A1	12/2010

(57) **ABSTRACT**

A memory circuit having: a memory array including one or more memory banks; a first processor; and a processor control interface for receiving data processing commands directed to the first processor from a central processor, the processor control interface being adapted to indicate to the central processor when the first processor has finished accessing one or more of the memory banks of the memory array, these memory banks becoming accessible to the central processor.

Fabrice Devaux, Jean-François Roy. “Memory circuit with integrated processor.” US 10,324,870 B2.

UPMEM PIM System Organization (I)

- *FIG. 1 schematically illustrates a computing system comprising DRAM circuits having integrated processors according to an example embodiment*

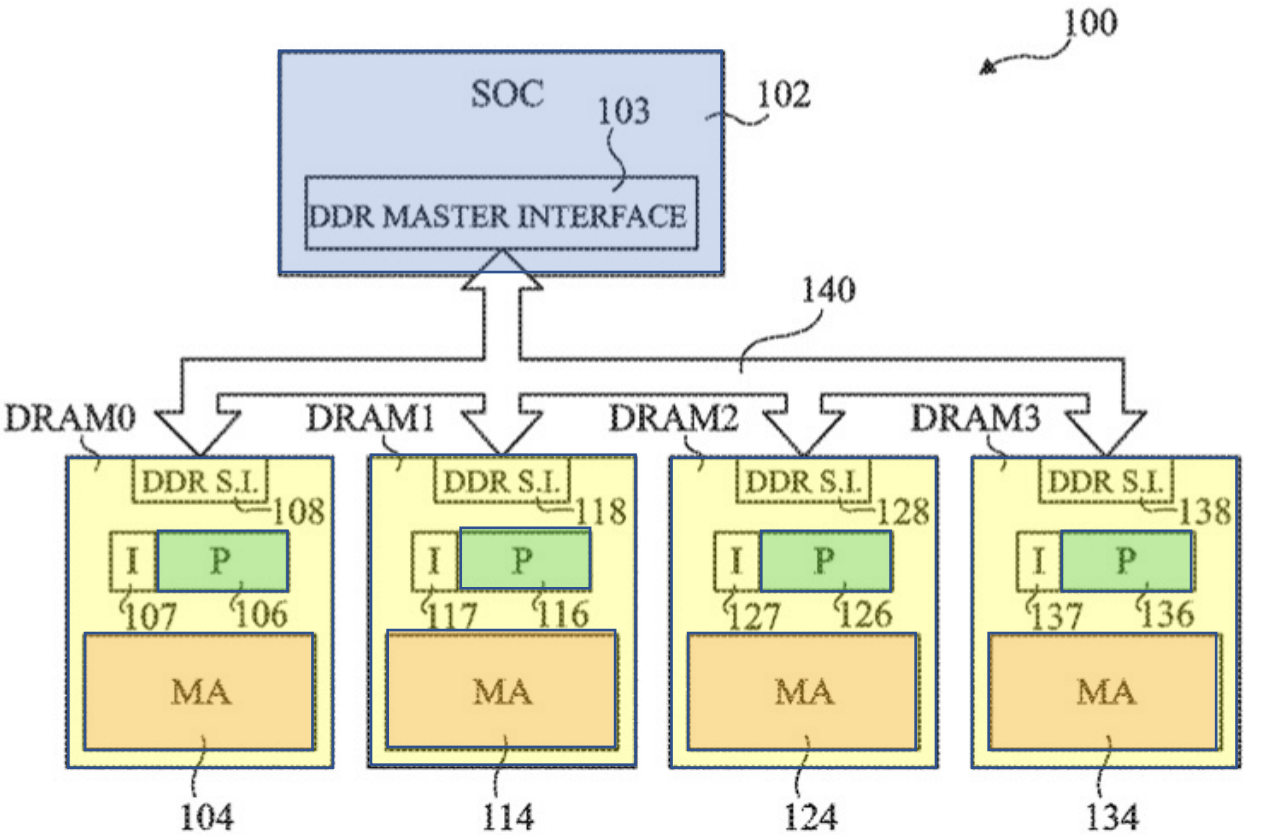

Fig 1

Fabrice Devaux, Jean-François Roy. "Memory circuit with integrated processor." US 10,324,870 B2.

UPMEM PIM System Organization (II)

- In a UPMEM-based PIM system UPMEM DIMMs coexist with regular DDR4 DIMMs

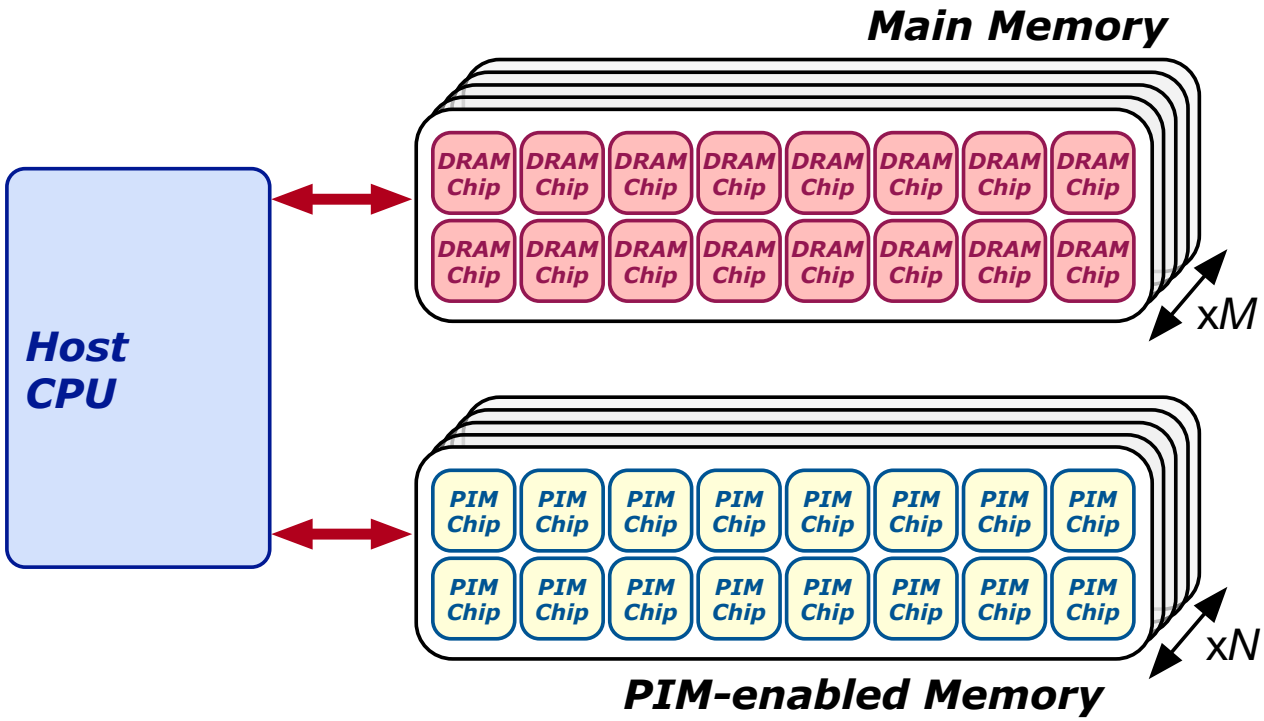

UPMEM PIM System Organization (III)

- A UPMEM DIMM contains 8 or 16 chips
  - Thus, 1 or 2 ranks of 8 chips each
- Inside each PIM chip there are:
  - 8 64MB banks per chip: Main RAM (MRAM) banks
  - 8 DRAM Processing Units (DPUs) in each chip, 64 DPUs per rank

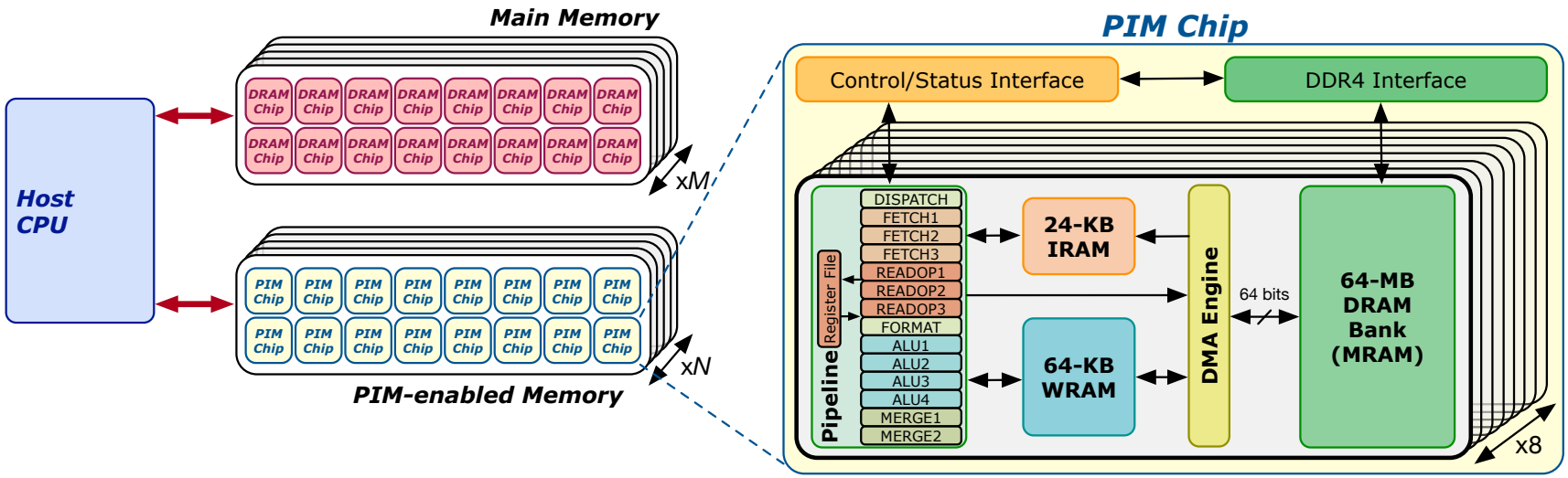

DRAM Processing Unit (I)

- *FIG. 4 schematically illustrates part of the computing system of FIG. 1 in more detail according to an example embodiment*

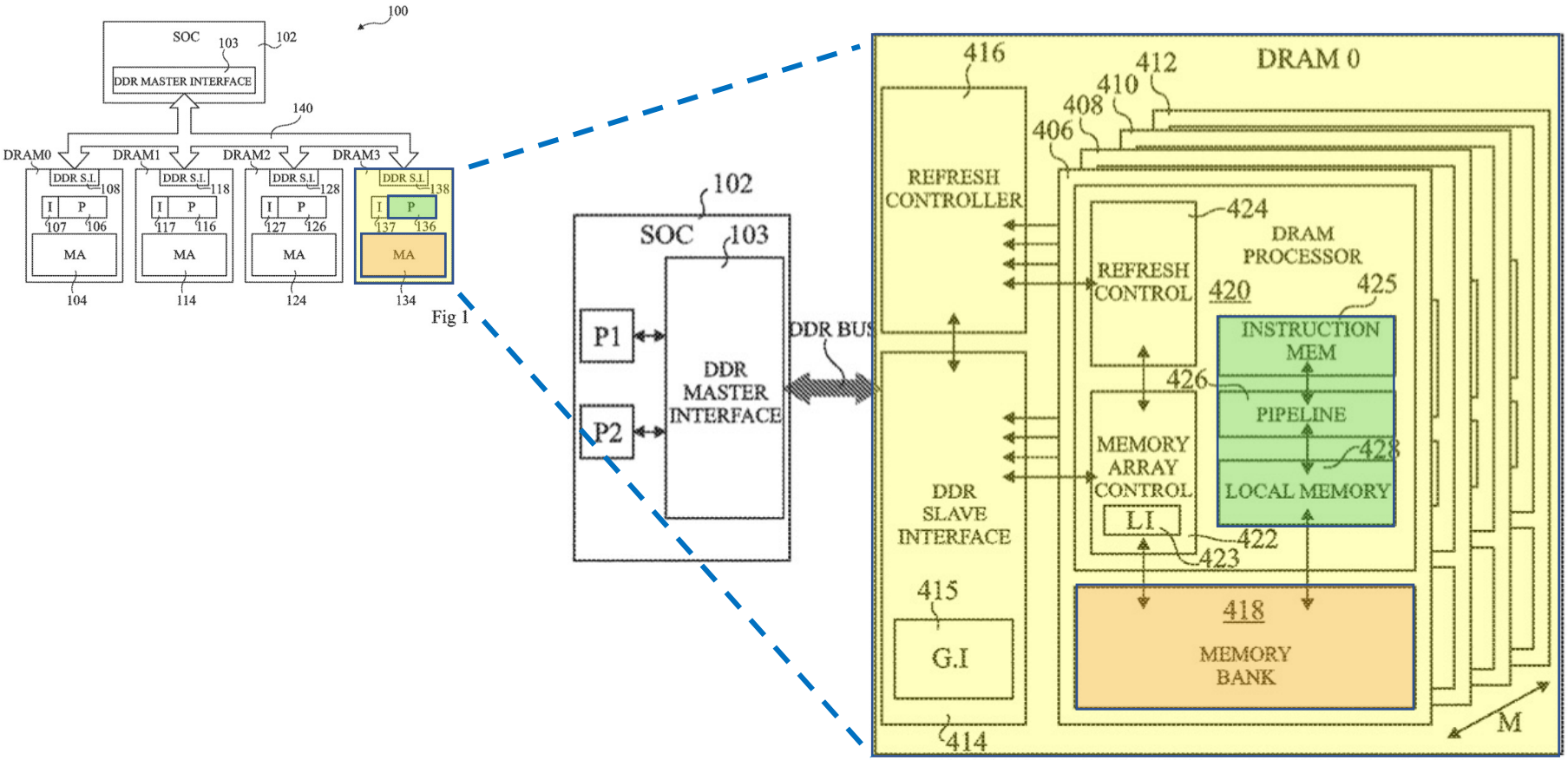

Fig 4

Fabrice Devaux, Jean-François Roy. "Memory circuit with integrated processor." US 10,324,870 B2.

DRAM Processing Unit (II)

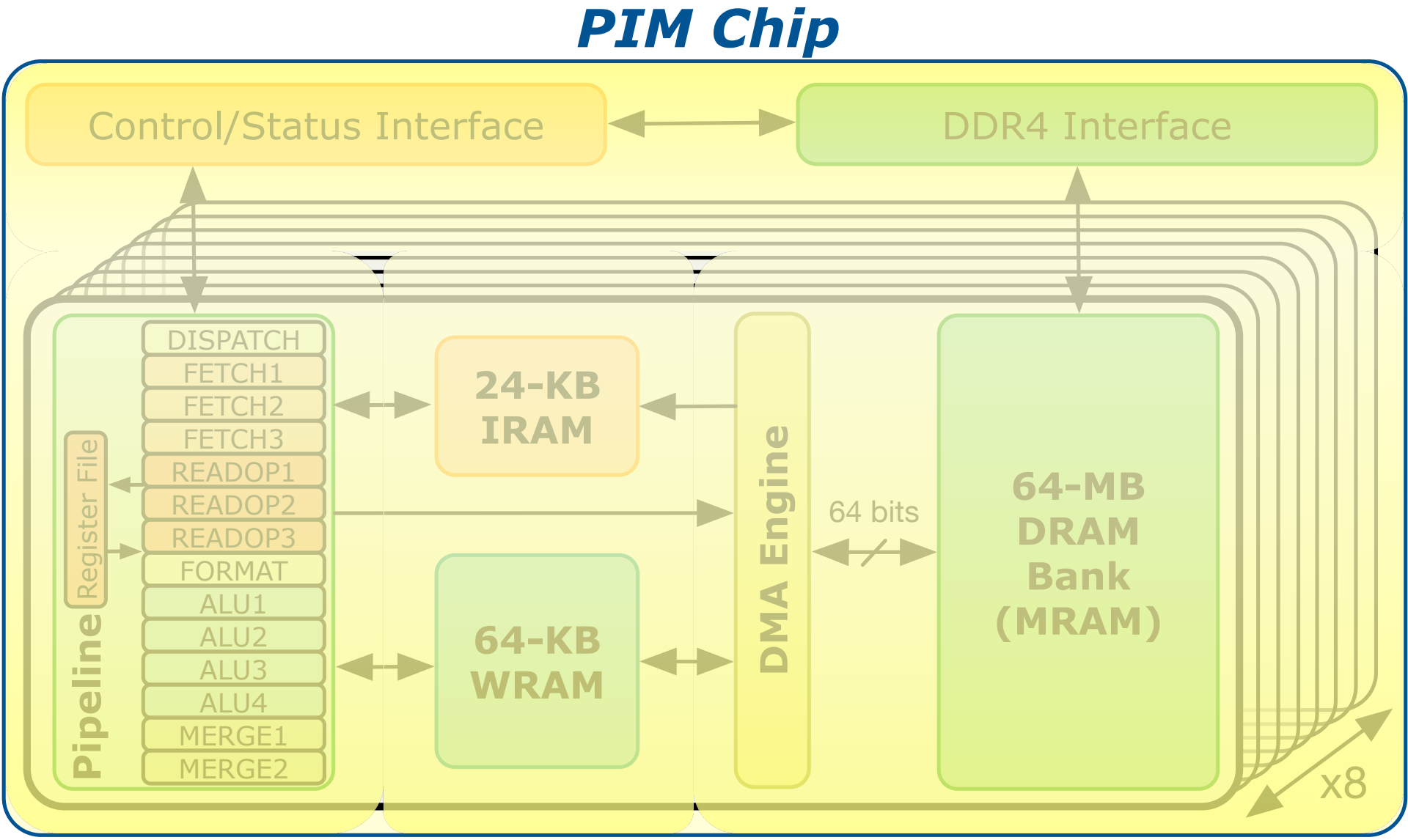

DPU Pipeline

- In-order pipeline
  - Up to 425 MHz
- Fine-grain multithreaded
  - 24 hardware threads
- 14 pipeline stages
  - DISPATCH: Thread selection
  - FETCH: Instruction fetch
  - READOP: Register file
  - FORMAT: Operand formatting
  - ALU: Operation and WRAM
  - MERGE: Result formatting

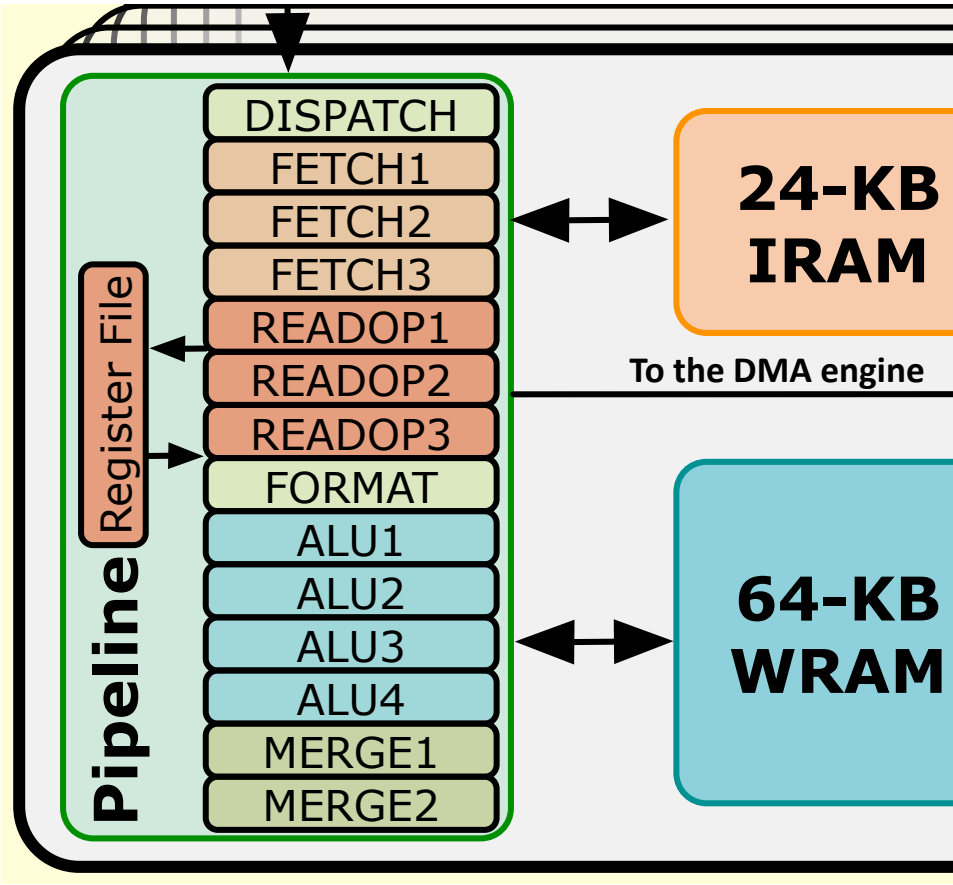

Fine-grained Multithreading

Fine-Grained Multithreading (I)

- Idea: Hardware has multiple thread contexts (PC+registers). Each cycle, fetch engine fetches from a different thread
  - By the time the fetched branch/instruction resolves, no instruction is fetched from the same thread
  - Branch/instruction resolution latency overlapped with execution of other threads' instructions

+ No logic needed for handling control and data dependences within a thread

-- Single thread performance suffers

-- Extra logic for keeping thread contexts

-- Does not overlap latency if not enough threads to cover the whole pipeline

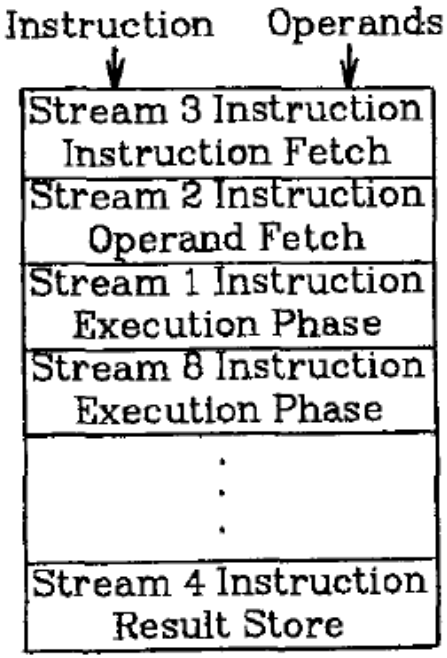

Fine-Grained Multithreading (II)

- Idea: Switch to another thread every cycle such that no two instructions from a thread are in the pipeline concurrently

- Tolerates the control and data dependence latencies by overlapping the latency with useful work from other threads
- Improves pipeline utilization by taking advantage of multiple threads

- Thornton, "Parallel Operation in the Control Data 6600," AFIPS 1964
- Smith, "A pipelined, shared resource MIMD computer," ICPP 1978

Lecture on Fine-Grained Multithreading

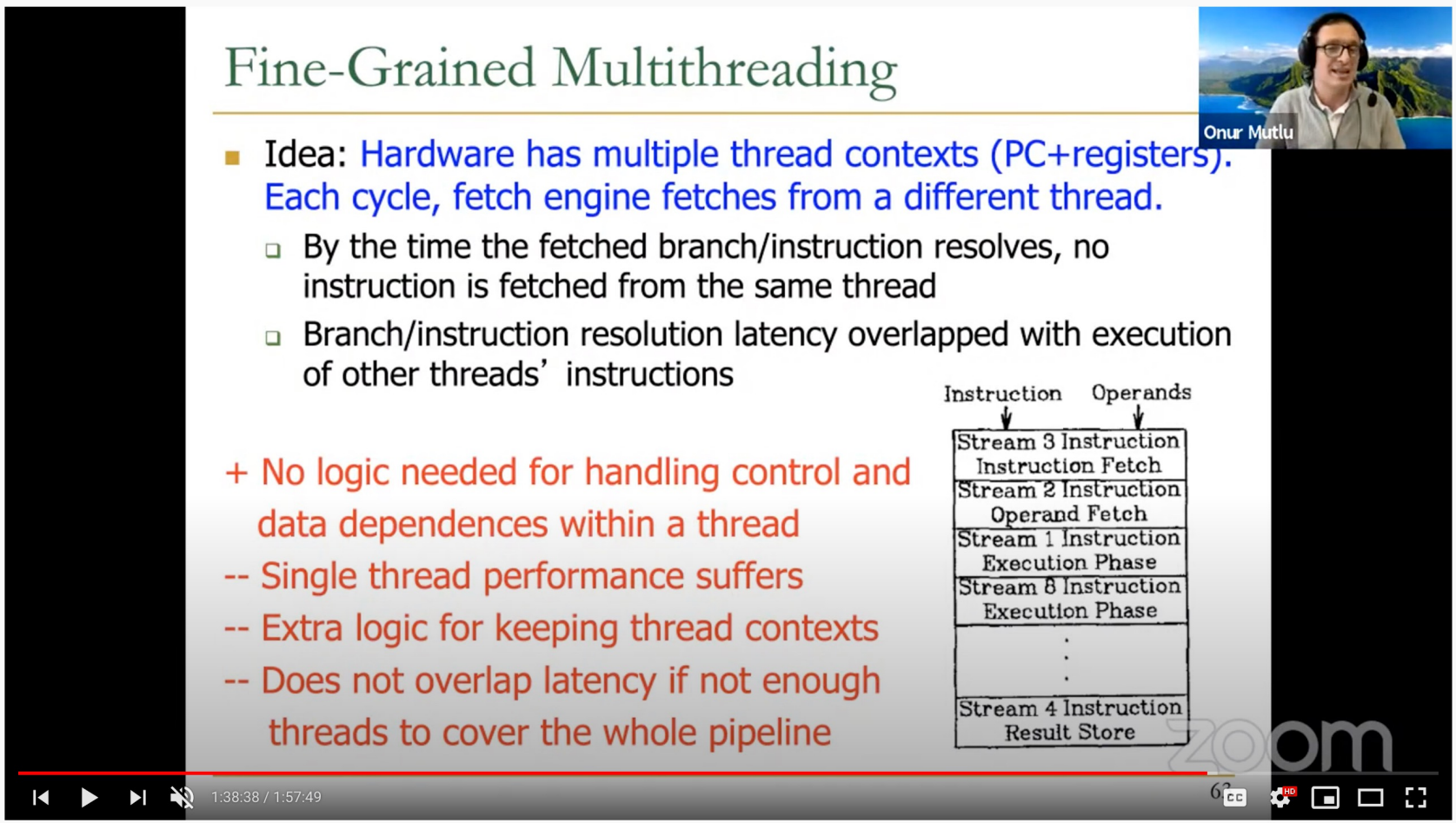

Onur Mutlu - Digital Design & Comp Arch - Lecture 14: Pipelined Processor Design (Spring 2021)

1,193 views • Streamed live on Apr 22, 2021

42 0 SHARE SAVE ...

Onur Mutlu Lectures
16.2K subscribers

ANALYTICS EDIT VIDEO

DPU Pipeline

- In-order pipeline
  - Up to 425 MHz
- Fine-grain multithreaded
  - 24 hardware threads
- 14 pipeline stages
  - DISPATCH: Thread selection
  - FETCH: Instruction fetch
  - READOP: Register file
  - FORMAT: Operand formatting
  - ALU: Operation and WRAM
  - MERGE: Result formatting

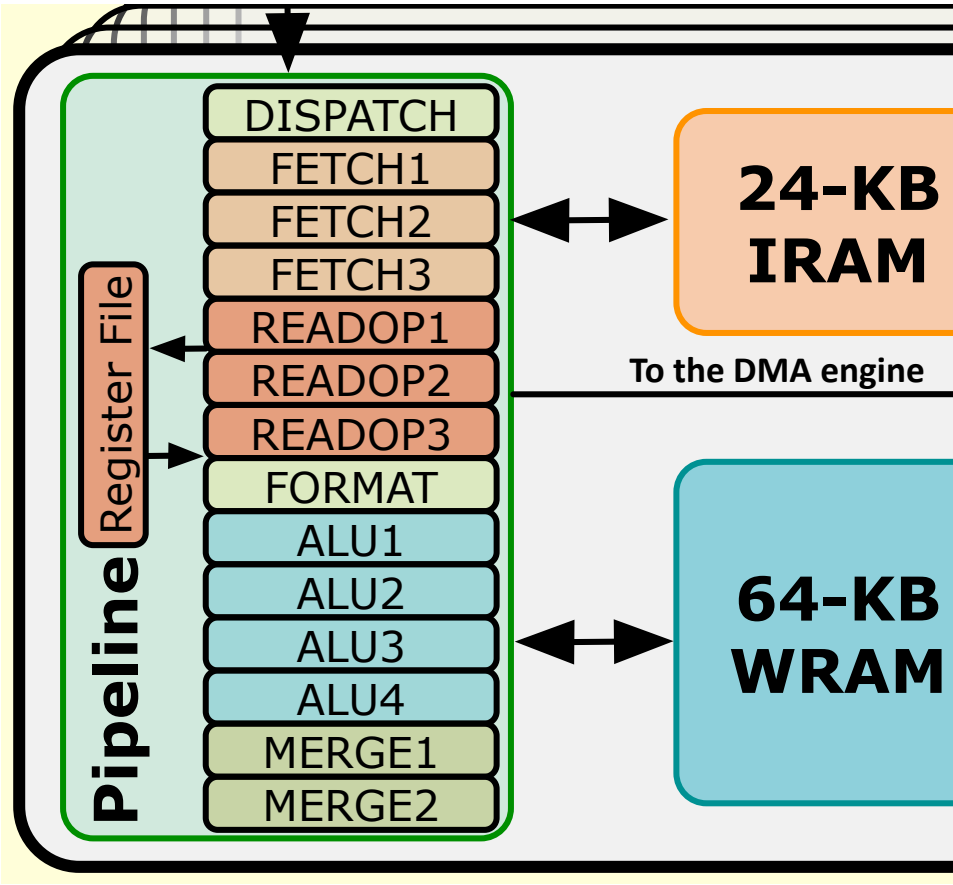

DPU Instruction Set Architecture

- Specific 32-bit ISA
  - Aiming at scalar, in-order, and multithreaded implementation
  - Allowing compilation of 64-bit C code
  - LLVM/Clang compiler

Instruction Set Architecture — UPMEM DPU SDK 2021.2.0 Documentation

UPMEM development tools documentation

» Instruction Set Architecture View page source

Instruction Set Architecture

This section covers the architecture concepts required to understand and use UPMEM DPU processor as a software developer. It is also providing an exhaustive list of the available processor instructions.

Software developers should use this section as a reference manual to develop or debug assembly code.

Resources overview

Thread registers

The system is composed of 24 hardware threads. Each of them owns a set of private resources:

- 24 general purpose 32-bits registers named `r0` through `r23`
- A 16-bits wide program counter, named PC. Notice that the PC value does not address an instruction in memory, but the index of such an instruction directly. For example, a PC equal to 1 represents the second instruction in the DPU's program memory.
- Two persistent flags, keeping information about the previous result of an arithmetic or logical instruction:
  - ZF: last result is equal to zero

Display a menu

https://sdk.upmem.com/2021.2.0/201_IS.html#

Microbenchmark for INT32 ADD Throughput

C-based code

```
#define SIZE 256
int* bufferA = mem_alloc(SIZE * sizeof(int));
for(int i = 0; i < SIZE; i++){
    int temp = bufferA[i];
    temp += scalar;
    bufferA[i] = temp;
}
```

Compiled code (UPMEM DPU ISA)

```
 move r2, 0
.LBB0_1:                    // Loop header
 lsl_add r3, r0, r2, 2      // Address calculation
 lw r4, r3, 0               // Load from WRAM
 add r4, r4, r1             // Add
 sw r3, 0, r4               // Store to WRAM
 add r2, r2, 1              // Index update
 jneq r2, 256, .LBB0_1      // Conditional jump
```

More on the UPMEM PIM Architecture

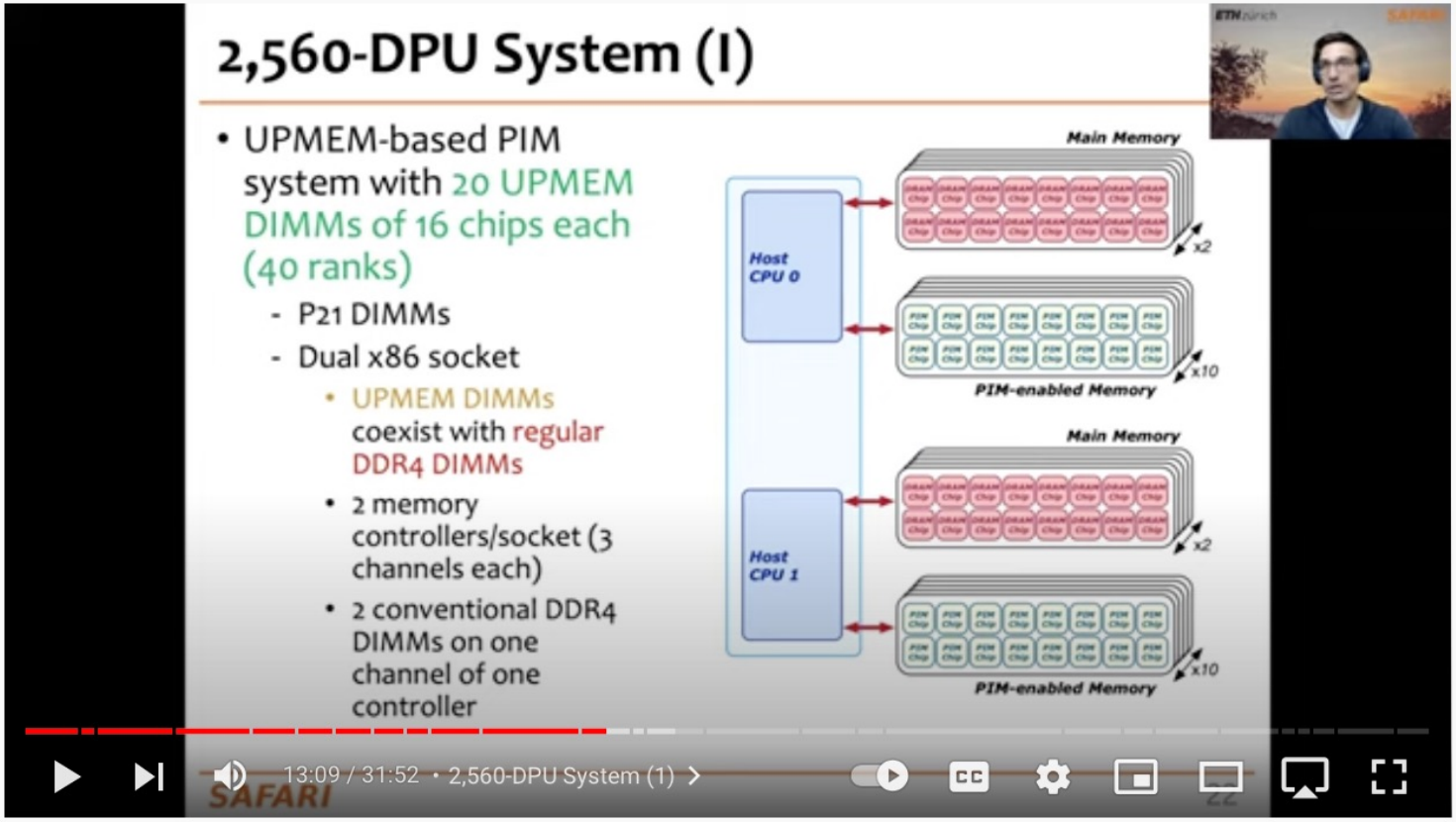

Processing-in-Memory Course: Lecture 2: Real-world PIM: UPMEM PIM Architecture - Spring 2022

669 views • Premiered Mar 17, 2022

22 DISLIKE SHARE CLIP SAVE ...

Onur Mutlu Lectures

25.9K subscribers

SUBSCRIBED

https://youtu.be/6dwV_RBjK2c
https://youtu.be/myG-H_8oN8A

Understanding a Modern PIM Architecture

Benchmarking a New Paradigm: Experimental Analysis and Characterization of a Real Processing-in-Memory System

JUAN GÓMEZ-LUNA[1], IZZAT EL HAJJ[2], IVAN FERNANDEZ[1,3], CHRISTINA GIANNOULA[1,4], GERALDO F. OLIVEIRA[1], AND ONUR MUTLU[1]

[1]ETH Zürich
[2]American University of Beirut
[3]University of Malaga
[4]National Technical University of Athens

Corresponding author: Juan Gómez-Luna (e-mail: juang@ethz.ch).

https://arxiv.org/pdf/2105.03814.pdf

https://github.com/CMU-SAFARI/prim-benchmarks

Key Takeaway 1

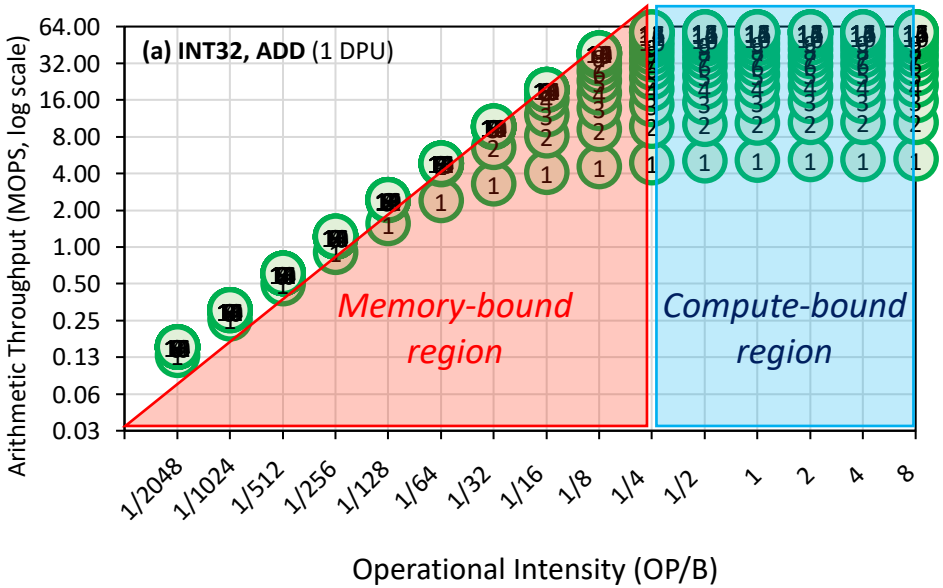

The throughput saturation point is as low as ¼ OP/B, i.e., 1 integer addition per every 32-bit element fetched

KEY TAKEAWAY 1

The UPMEM PIM architecture is fundamentally compute bound. As a result, **the most suitable workloads are memory-bound.**

CPU/GPU: Performance Comparison

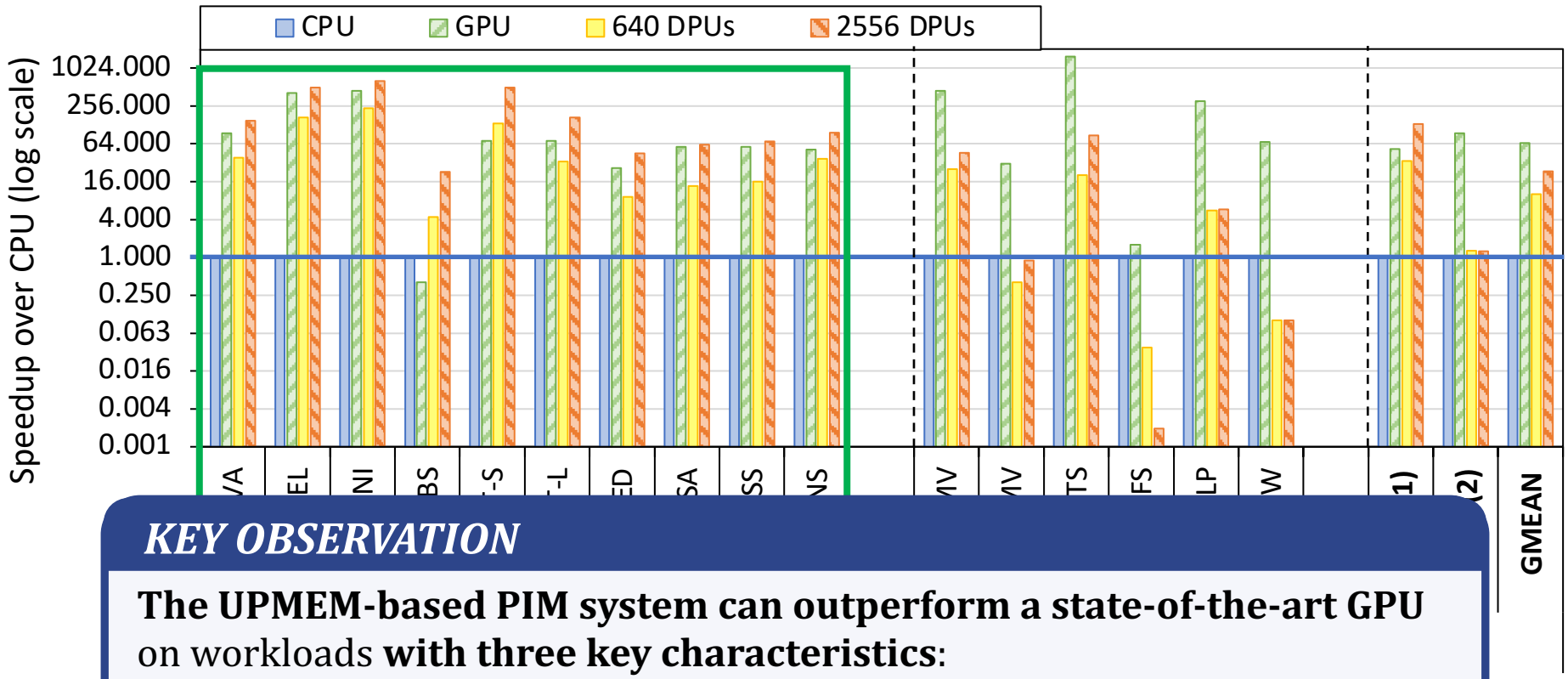

KEY OBSERVATION

The UPMEM-based PIM system can outperform a state-of-the-art GPU on workloads **with three key characteristics**:

1. Streaming memory accesses
2. No or little inter-DPU synchronization
3. No or little use of integer multiplication, integer division, or floating point operations

These three key characteristics make a **workload potentially suitable to the UPMEM PIM architecture**.

Key Takeaway 2

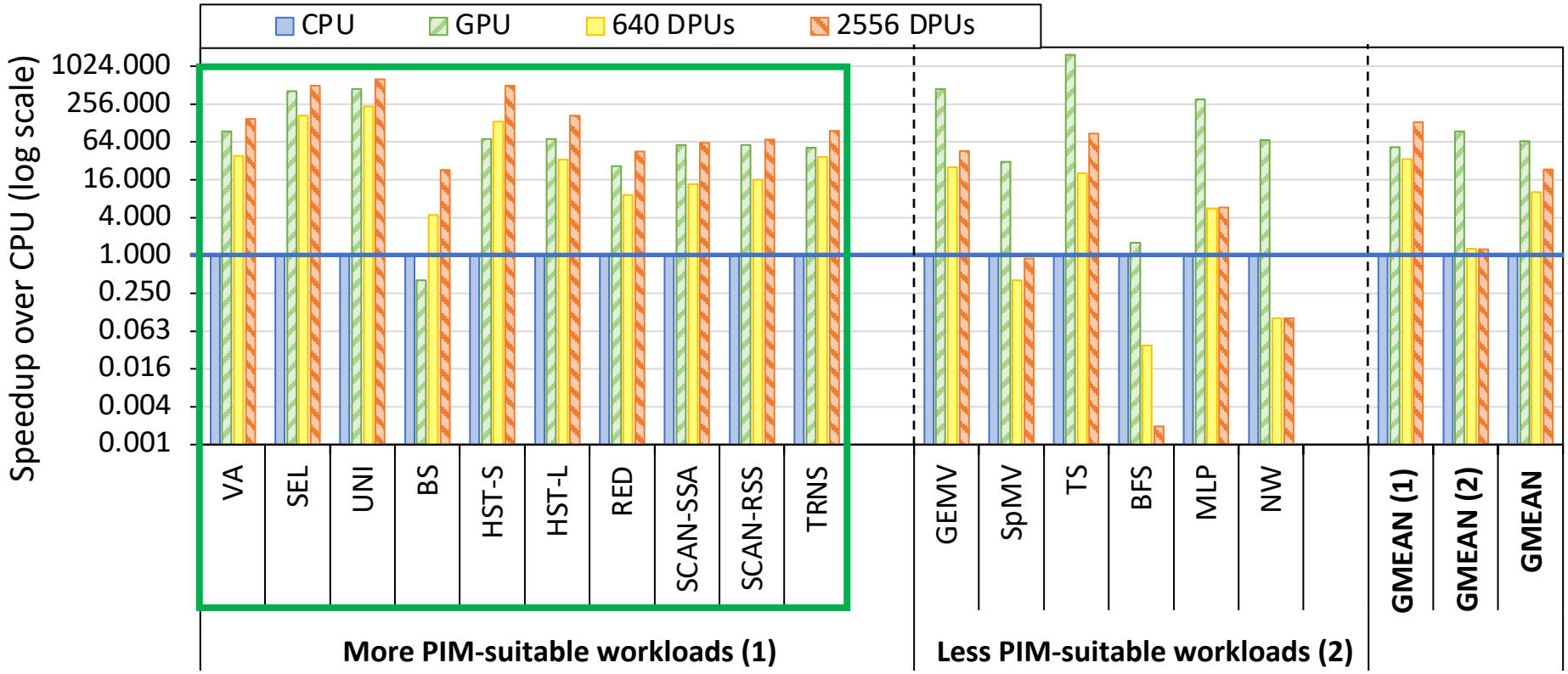

KEY TAKEAWAY 2

The most well-suited workloads for the UPMEM PIM architecture use no arithmetic operations or use only simple operations (e.g., bitwise operations and integer addition/subtraction).

Key Takeaway 3

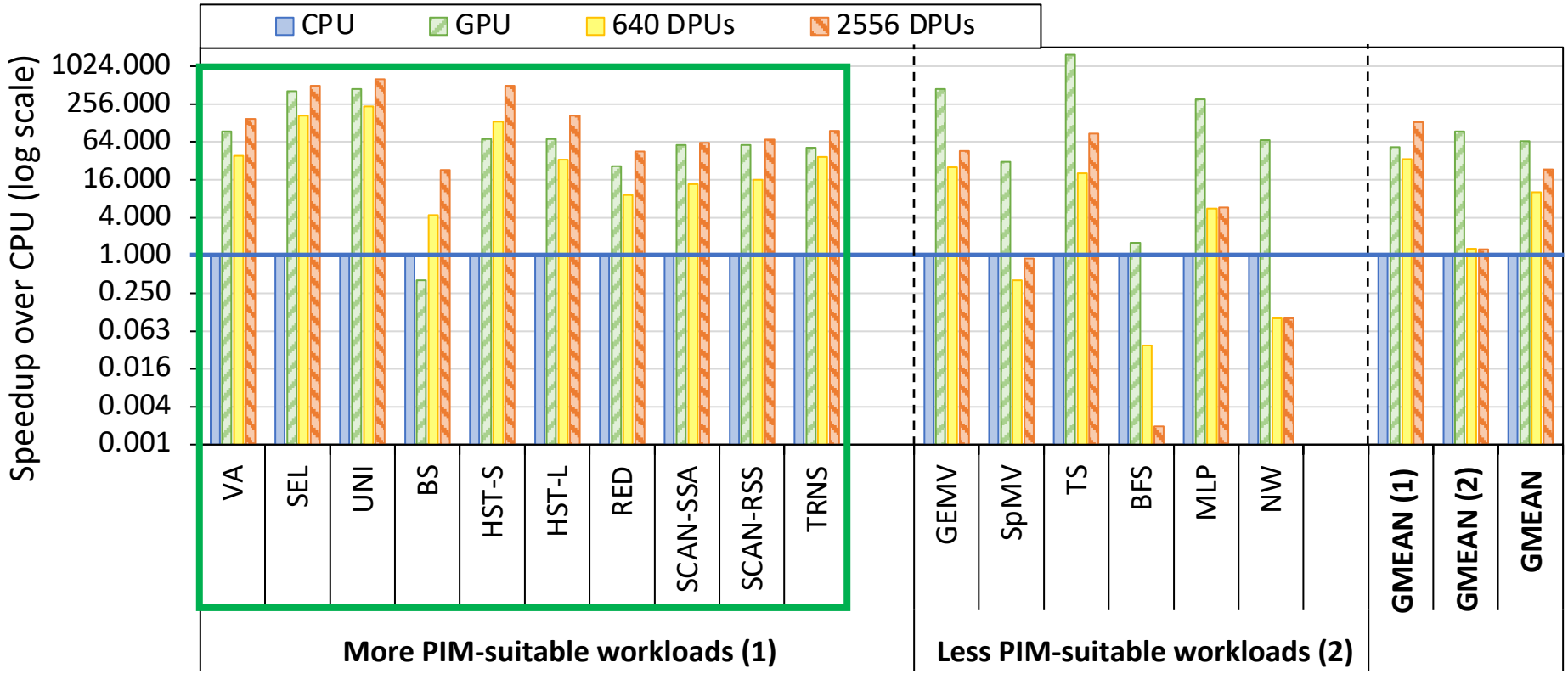

KEY TAKEAWAY 3

The most well-suited workloads for the UPMEM PIM architecture require little or no communication across DPUs (inter-DPU communication).

Key Takeaway 4

KEY TAKEAWAY 4

- UPMEM-based PIM systems **outperform state-of-the-art CPUs in terms of performance** (by 23.2× on 2,556 DPUs for 16 PrIM benchmarks) **and energy efficiency on most of PrIM benchmarks.**

- UPMEM-based PIM systems **outperform state-of-the-art GPUs on a majority of PrIM benchmarks** (by 2.54× on 2,556 DPUs for 10 PrIM benchmarks), and the outlook is even more positive for future PIM systems.

- UPMEM-based PIM systems are **more energy-efficient than state-of-the-art CPUs and GPUs on workloads that they provide performance improvements** over the CPUs and the GPUs.

PrIM Repository

- All microbenchmarks, benchmarks, and scripts
- https://github.com/CMU-SAFARI/prim-benchmarks

CMU-SAFARI / prim-benchmarks

Unwatch 2 | Star 2 | Fork 1

Code | Issues | Pull requests | Actions | Projects | Wiki | Security | Insights | Settings

main | prim-benchmarks / README.md | Go to file

Juan Gomez Luna PrIM -- first commit | Latest commit 3de4b49 9 days ago | History

1 contributor

168 lines (132 sloc) | 5.79 KB | Raw | Blame

PrIM (Processing-In-Memory Benchmarks)

PrIM is the first benchmark suite for a real-world processing-in-memory (PIM) architecture. PrIM is developed to evaluate, analyze, and characterize the first publicly-available real-world processing-in-memory (PIM) architecture, the UPMEM PIM architecture. The UPMEM PIM architecture combines traditional DRAM memory arrays with general-purpose in-order cores, called DRAM Processing Units (DPUs), integrated in the same chip.

PrIM provides a common set of workloads to evaluate the UPMEM PIM architecture with and can be useful for programming, architecture and system researchers all alike to improve multiple aspects of future PIM hardware and software. The workloads have different characteristics, exhibiting heterogeneity in their memory access patterns, operations and data types, and communication patterns. This repository also contains baseline CPU and GPU implementations of PrIM benchmarks for comparison purposes.

PrIm also includes a set of microbenchmarks can be used to assess various architecture limits such as compute throughput and memory bandwidth.

Samsung FIMDRAM (aka HBM-PIM)

Samsung Function-in-Memory DRAM (2021)

Samsung Newsroom

CORPORATE | PRODUCTS | PRESS RESOURCES | VIEWS | ABOUT US

Samsung Develops Industry's First High Bandwidth Memory with AI Processing Power

Korea on February 17, 2021

Audio Share

The new architecture will deliver over twice the system performance and reduce energy consumption by more than 70%

Samsung Electronics, the world leader in advanced memory technology, today announced that it has developed the industry's first High Bandwidth Memory (HBM) integrated with artificial intelligence (AI) processing power — the HBM-PIM. The new processing-in-memory (PIM) architecture brings powerful AI computing capabilities inside high-performance memory, to accelerate large-scale processing in data centers, high performance computing (HPC) systems and AI-enabled mobile applications.

Kwangil Park, senior vice president of Memory Product Planning at Samsung Electronics stated, "Our groundbreaking HBM-PIM is the industry's first programmable PIM solution tailored for diverse AI-driven workloads such as HPC, training and inference. We plan to build upon this breakthrough by further collaborating with AI solution providers for even more advanced PIM-powered applications."

Samsung Function-in-Memory DRAM (2021)

- FIMDRAM based on HBM2

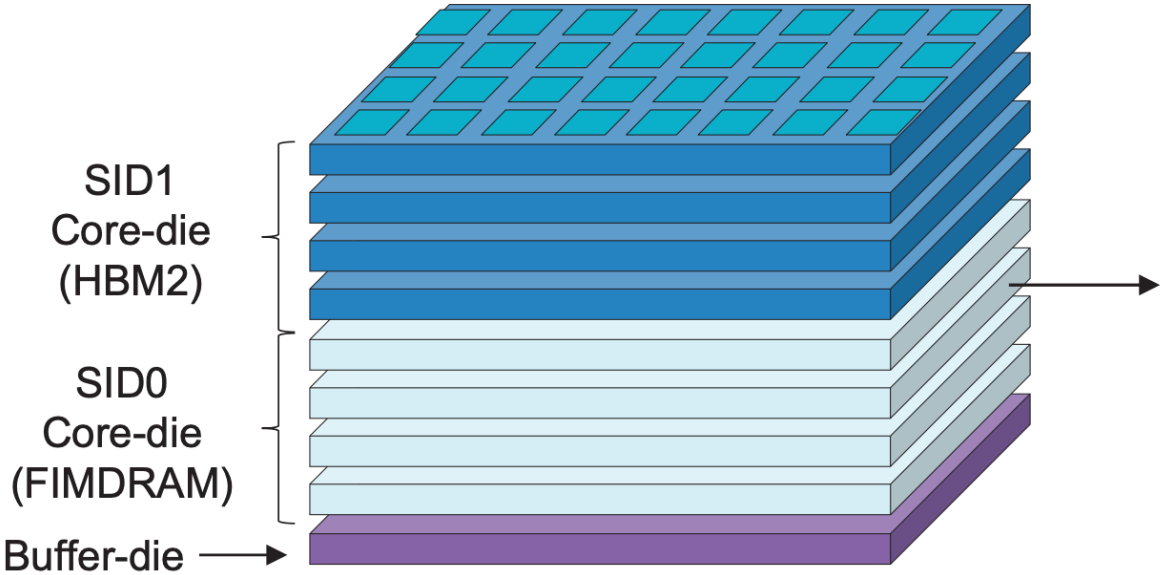

[3D Chip Structure of HBM with FIMDRAM]

Chip Specification
128DQ / 8CH / 16 banks / BL4
32 PCU blocks (1 FIM block/2 banks)
1.2 TFLOPS (4H)
FP16 ADD / Multiply (MUL) / Multiply-Accumulate (MAC) / Multiply-and- Add (MAD)

ISSCC 2021 / SESSION 25 / DRAM / 25.4

25.4 A 20nm 6GB Function-In-Memory DRAM, Based on HBM2 with a 1.2TFLOPS Programmable Computing Unit Using Bank-Level Parallelism, for Machine Learning Applications

Young-Cheon Kwon[1], Suk Han Lee[1], Jaehoon Lee[1], Sang-Hyuk Kwon[1], Je Min Ryu[1], Jong-Pil Son[1], Seongil O[1], Hak-Soo Yu[1], Haesuk Lee[1], Soo Young Kim[1], Youngmin Cho[1], Jin Guk Kim[1], Jongyoon Choi[1], Hyun-Sung Shin[1], Jin Kim[1], BengSeng Phuah[1], HyoungMin Kim[1], Myeong Jun Song[1], Ahn Choi[1], Daeho Kim[1], SooYoung Kim[1], Eun-Bong Kim[1], David Wang[2], Shinhaeng Kang[1], Yuhwan Ro[3], Seungwoo Seo[3], JoonHo Song[3], Jaeyoun Youn[1], Kyomin Sohn[1], Nam Sung Kim[1]

[1]Samsung Electronics, Hwaseong, Korea
[2]Samsung Electronics, San Jose, CA
[3]Samsung Electronics, Suwon, Korea

Samsung Function-in-Memory DRAM (2021)

Chip Implementation

- Mixed design methodology to implement FIMDRAM
  - Full-custom + Digital RTL

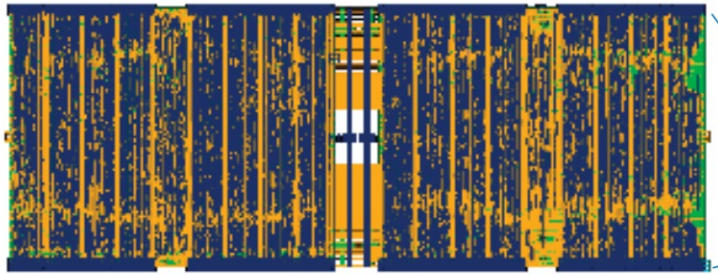

[Digital RTL design for PCU block]

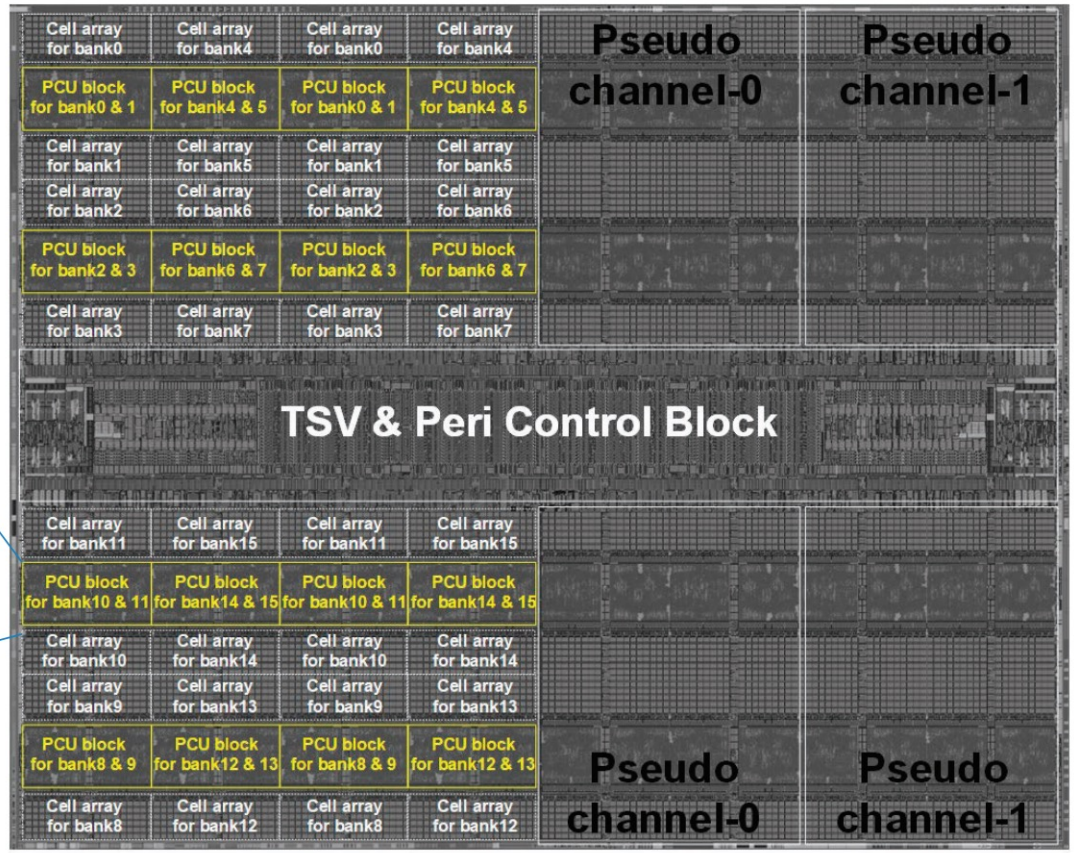

ISSCC 2021 / SESSION 25 / DRAM / 25.4

25.4 A 20nm 6GB Function-In-Memory DRAM, Based on HBM2 with a 1.2TFLOPS Programmable Computing Unit Using Bank-Level Parallelism, for Machine Learning Applications

Young-Cheon Kwon[1], Suk Han Lee[1], Jaehoon Lee[1], Sang-Hyuk Kwon[1], Je Min Ryu[1], Jong-Pil Son[1], Seongil O[1], Hak-Soo Yu[1], Haesuk Lee[1], Soo Young Kim[1], Youngmin Cho[1], Jin Guk Kim[1], Jongyoon Choi[1], Hyun-Sung Shin[1], Jin Kim[1], BengSeng Phuah[1], HyoungMin Kim[1], Myeong Jun Song[1], Ahn Choi[1], Daeho Kim[1], SooYoung Kim[1], Eun-Bong Kim[1], David Wang[2], Shinhaeng Kang[1], Yuhwan Ro[3], Seungwoo Seo[3], JoonHo Song[3], Jaeyoun Youn[1], Kyomin Sohn[1], Nam Sung Kim[1]

[1]Samsung Electronics, Hwaseong, Korea
[2]Samsung Electronics, San Jose, CA
[3]Samsung Electronics, Suwon, Korea

FIMDRAM: System Organization

- PIM units respond to standard DRAM column commands (RD or WR)
  - Compliant with unmodified JEDEC controllers
- They execute one wide-SIMD operation commanded by a PIM instruction with deterministic latency in a lock-step manner
- A PIM unit can get 16 16-bit operands from IOSAs, a register, and/or the result bus

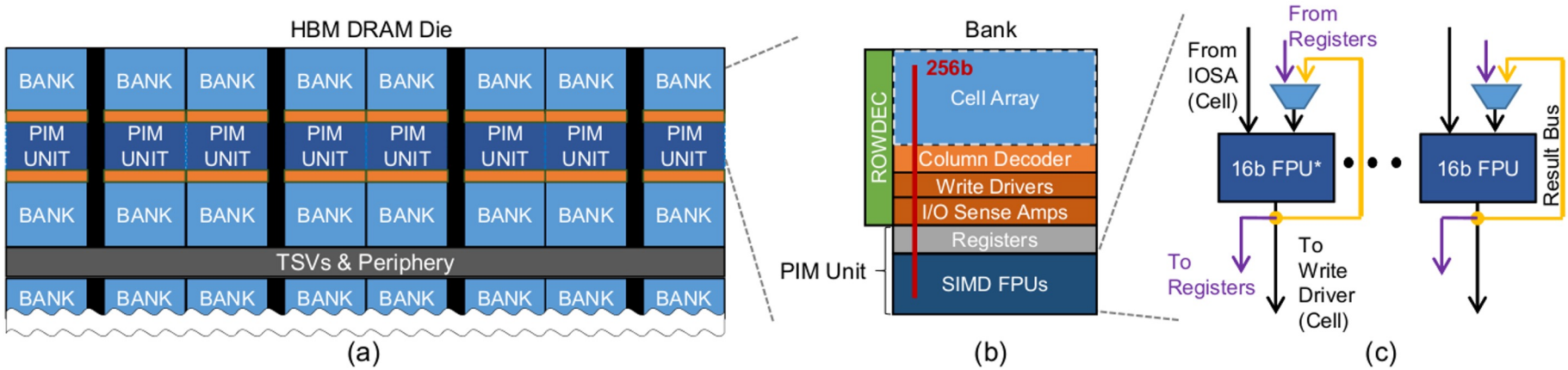

Lecture on FIMDRAM/HBM-PIM

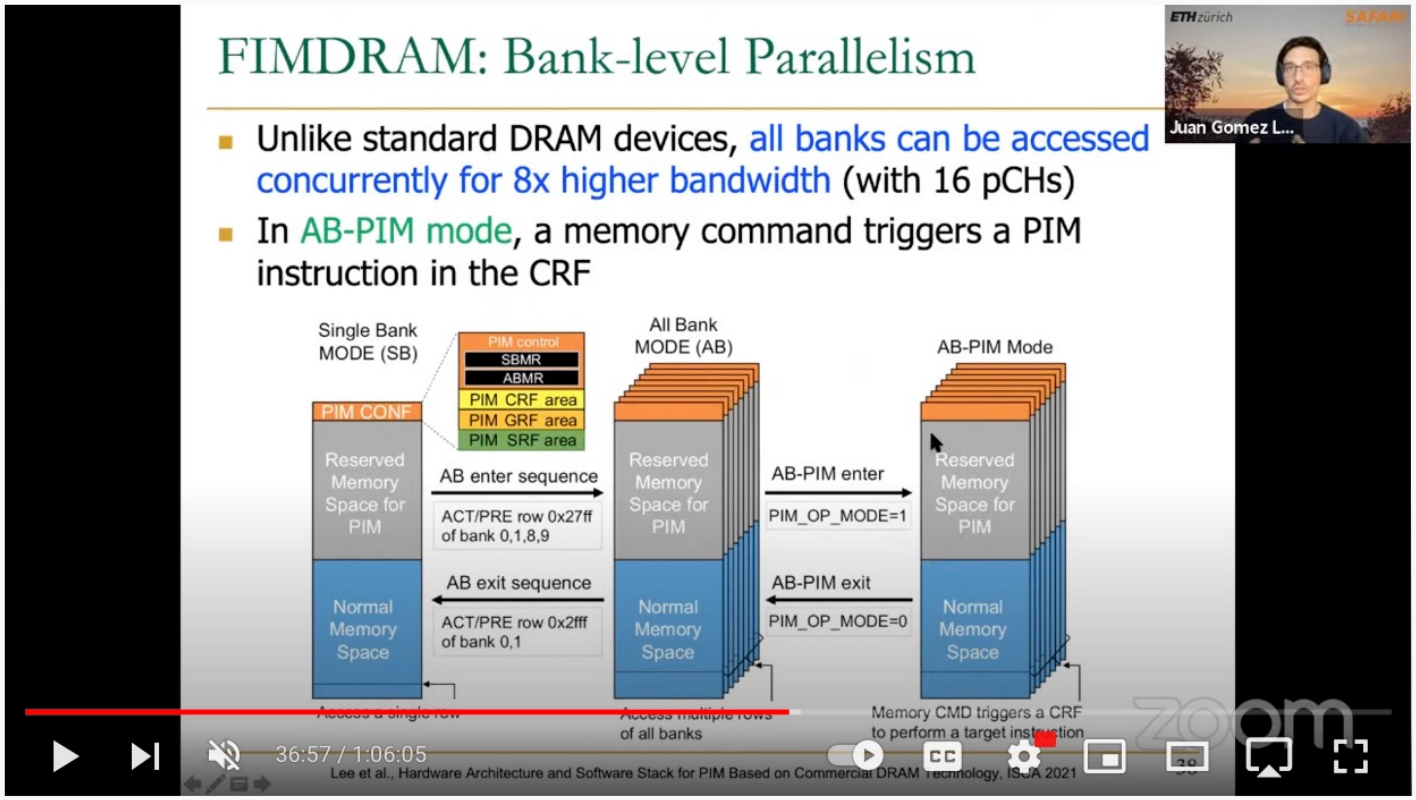

Processing-in-Memory Course: Lecture 4: Real-world PIM: Samsung HBM-PIM Architecture - Spring 2022

673 views • Streamed live on Mar 31, 2022 28 DISLIKE SHARE CLIP SAVE ...

Onur Mutlu Lectures
25.9K subscribers
SUBSCRIBED

https://youtu.be/_CpWJGK9N04

Samsung AxDIMM

Samsung AxDIMM (2021)

- DIMM-based PIM
  - DLRM recommendation system

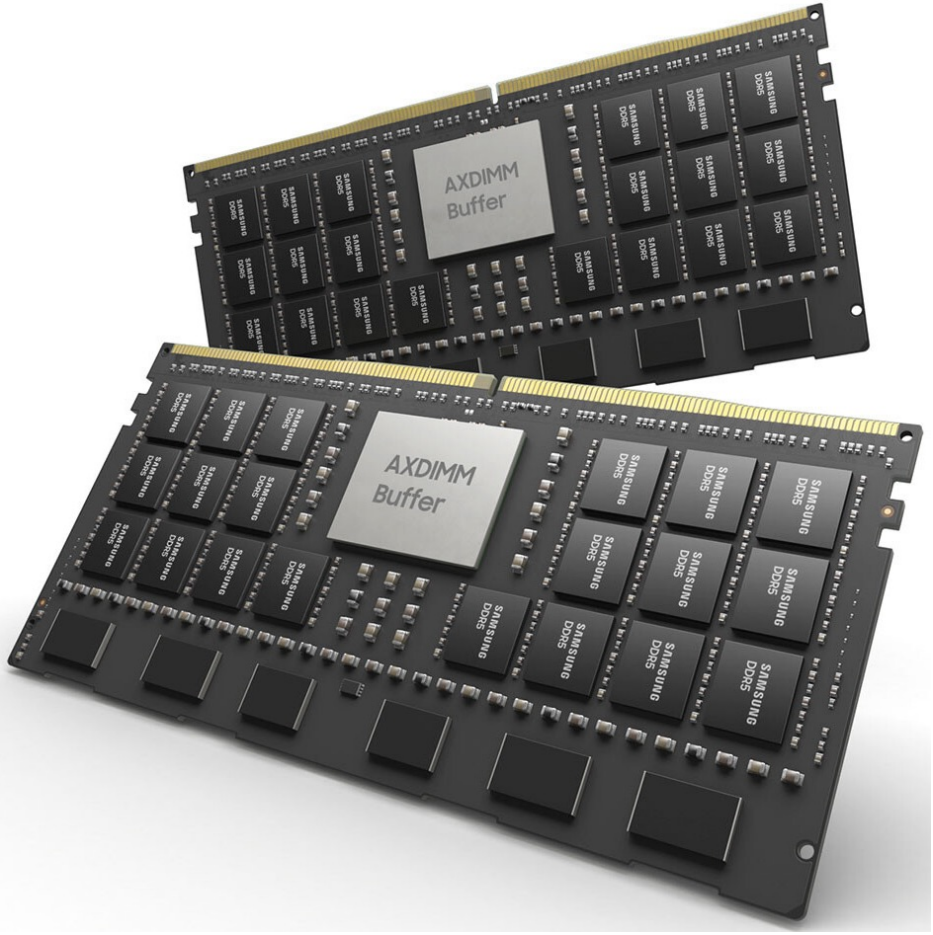

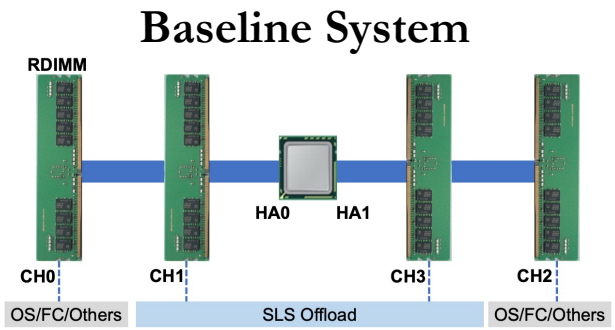

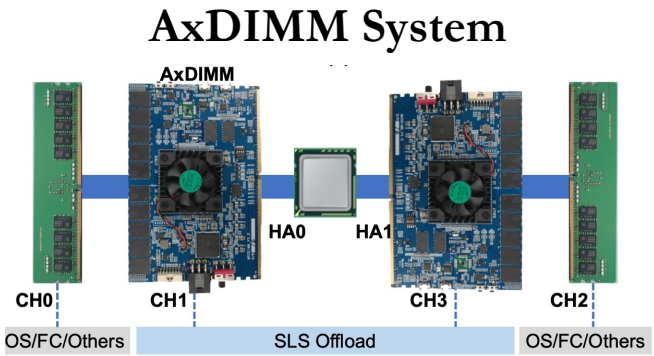

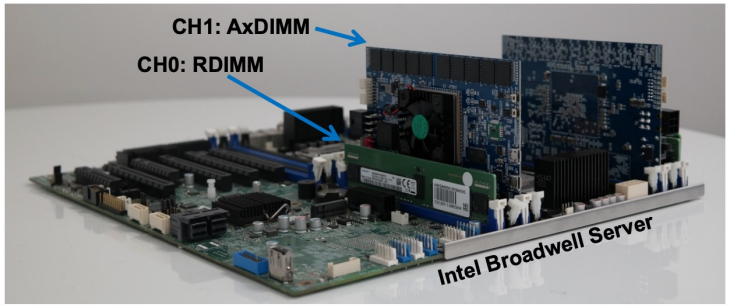

Ke et al. "Near-Memory Processing in Action: Accelerating Personalized Recommendation with AxDIMM", IEEE Micro (2021)

AxDIMM Design: Hardware Architecture

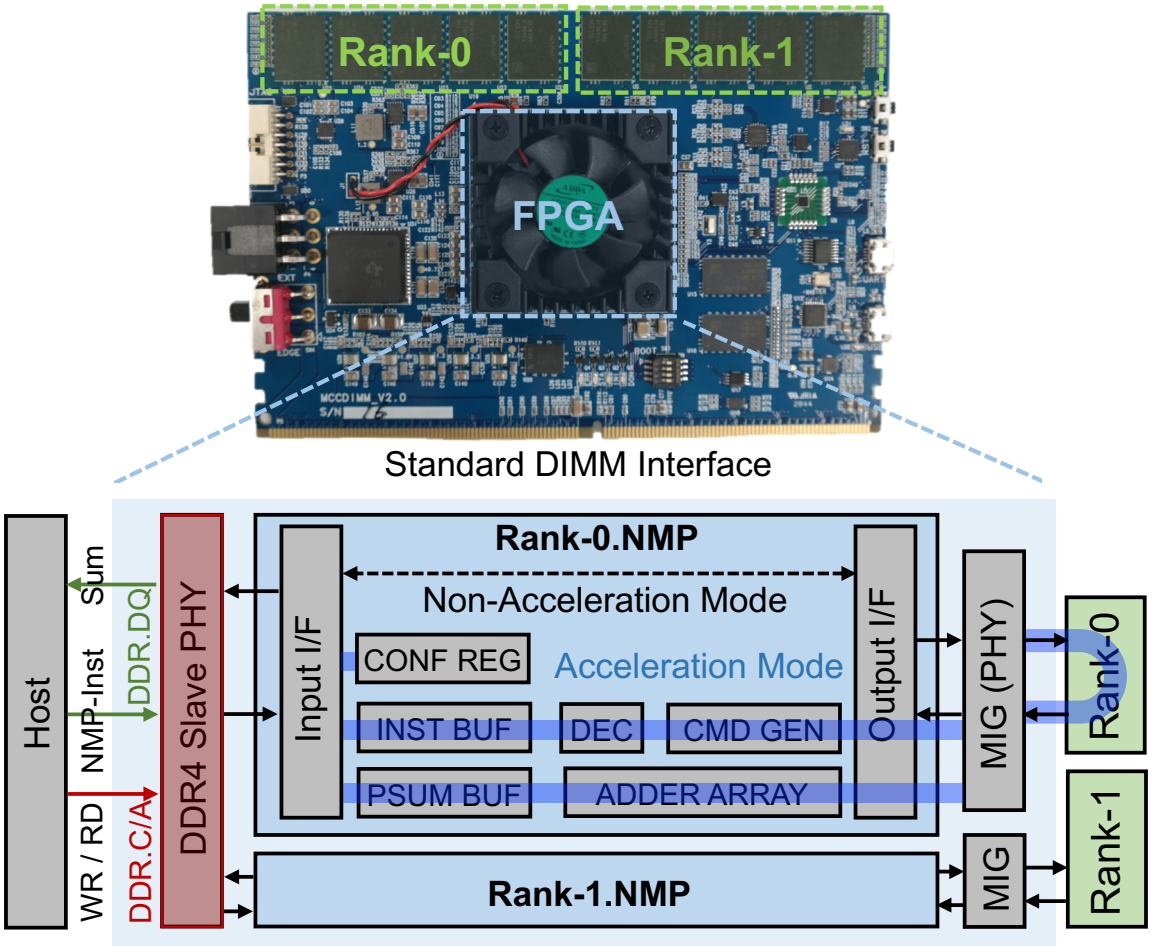

DDR4 slave PHY receives DRAM commands and NMP instructions (via DQ pins) from the host side

AxDIMM Design: Execution Flow

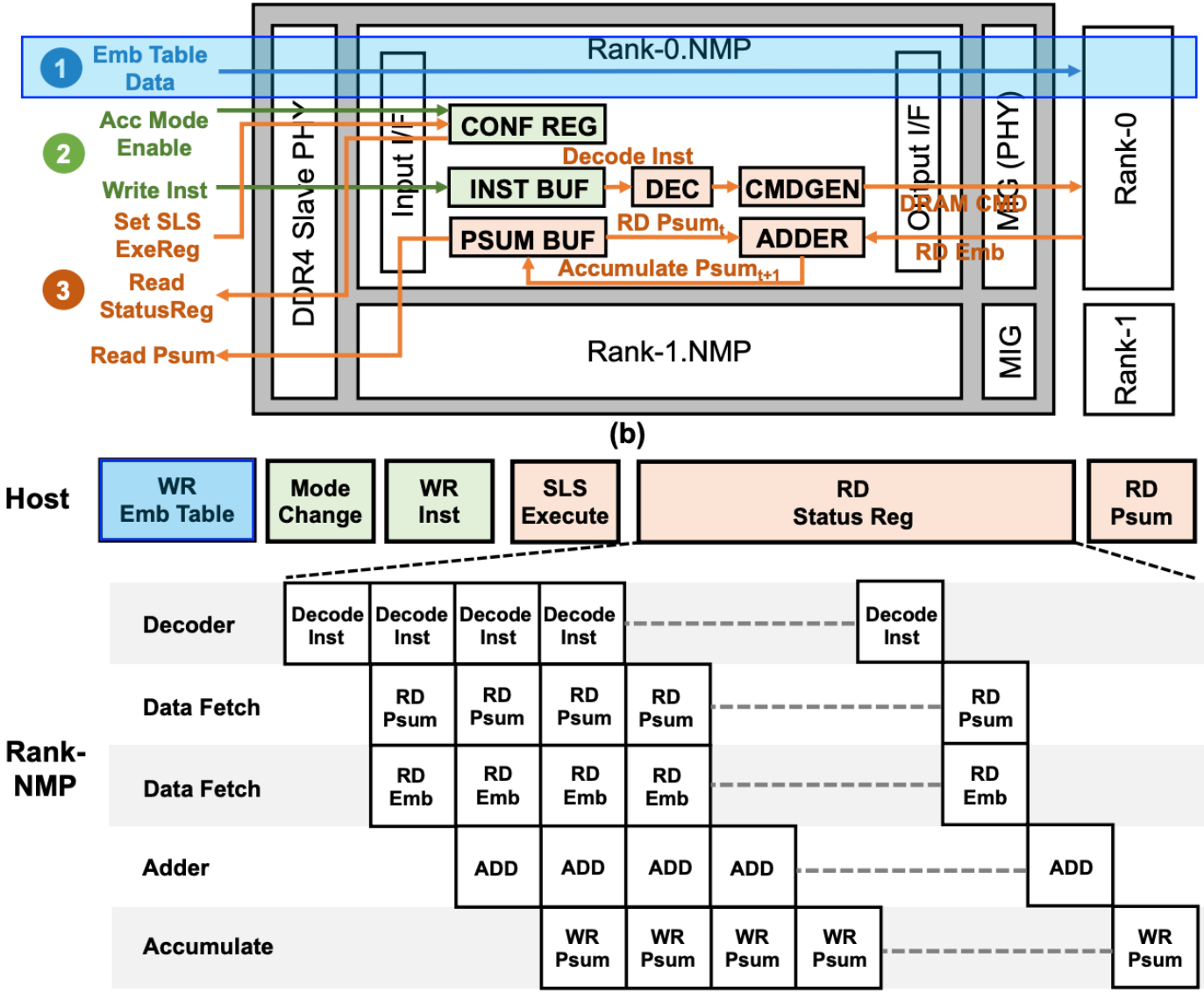

Lecture on AxDIMM

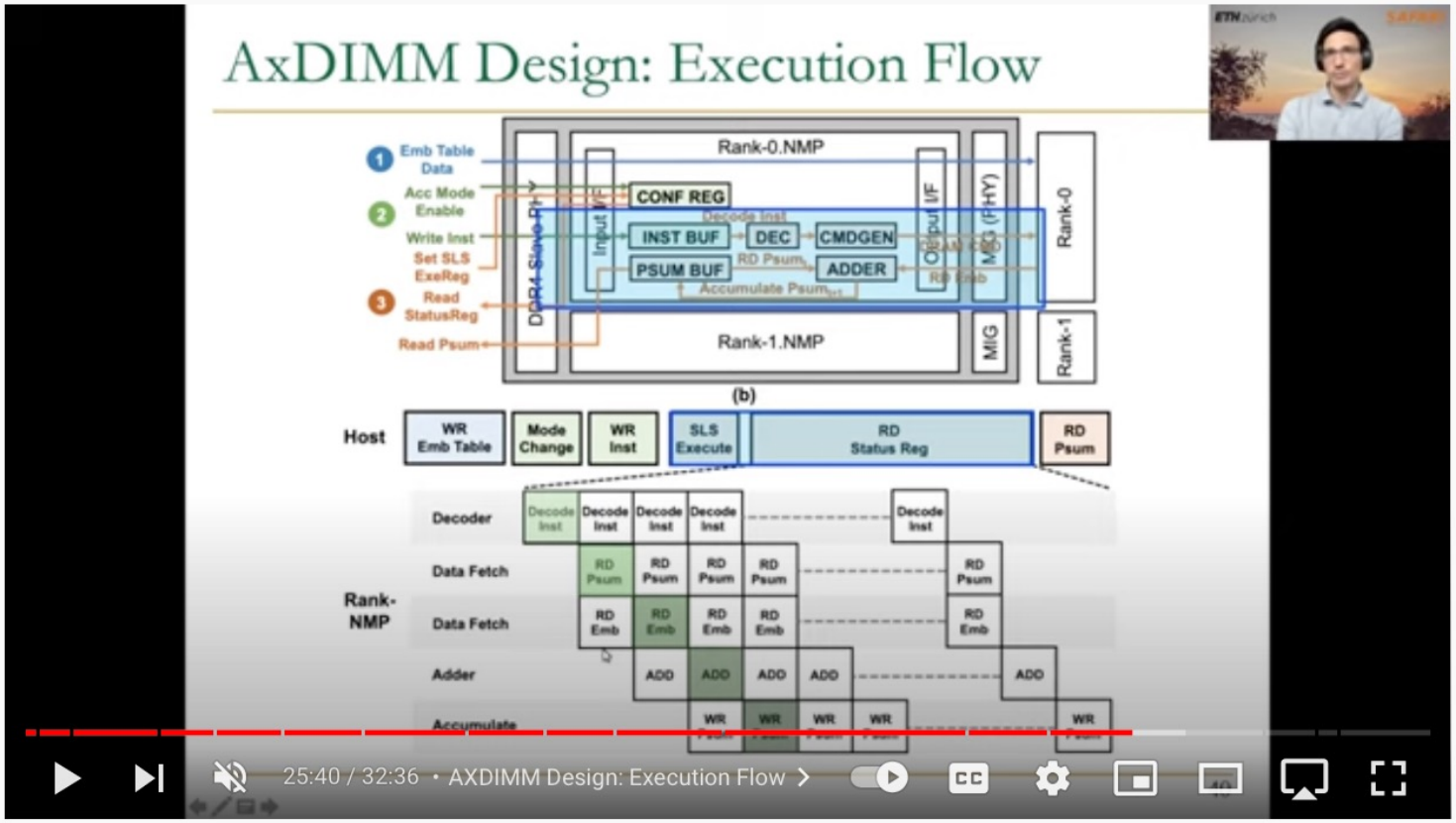

Processing-in-Memory Course: Lecture 9: Real-world PIM: Samsung AxDIMM - Spring 2022

448 views • Premiered May 5, 2022

19 DISLIKE SHARE CLIP SAVE ...

Onur Mutlu Lectures

25.9K subscribers

SUBSCRIBED

SK Hynix AiM

SK Hynix Accelerator-in-Memory (2022)

SKhynix NEWSROOM ENG

INSIGHT SK hynix STORY PRESS CENTER MULTIMEDIA Search

SK hynix Develops PIM, Next-Generation AI Accelerator

February 16, 2022

Seoul, February 16, 2022

SK hynix (or "the Company", www.skhynix.com) announced on February 16 that it has developed PIM*, a next-generation memory chip with computing capabilities.

**PIM(Processing In Memory): A next-generation technology that provides a solution for data congestion issues for AI and big data by adding computational functions to semiconductor memory*

It has been generally accepted that memory chips store data and CPU or GPU, like human brain, process data. SK hynix, following its challenge to such notion and efforts to pursue innovation in the next-generation smart memory, has found a breakthrough solution with the development of the latest technology.

SK hynix plans to showcase its PIM development at the world's most prestigious semiconductor conference, 2022 ISSCC*, in San Francisco at the end of this month. The company expects continued efforts for innovation of this technology to bring the memory-centric computing, in which semiconductor memory plays a central role, a step closer to the reality in devices such as smartphones.

**ISSCC: The International Solid-State Circuits Conference will be held virtually from Feb. 20 to Feb. 24 this year with a theme of "Intelligent Silicon for a Sustainable World"*

For the first product that adopts the PIM technology, SK hynix has developed a sample of GDDR6-AiM (Accelerator* in memory). The GDDR6-AiM adds computational functions to GDDR6* memory chips, which process data at 16Gbps. A combination of GDDR6-AiM with CPU or GPU instead of a typical DRAM makes certain computation speed 16 times faster. GDDR6-AiM is widely expected to be adopted for machine learning, high-performance computing, and big data computation and storage.

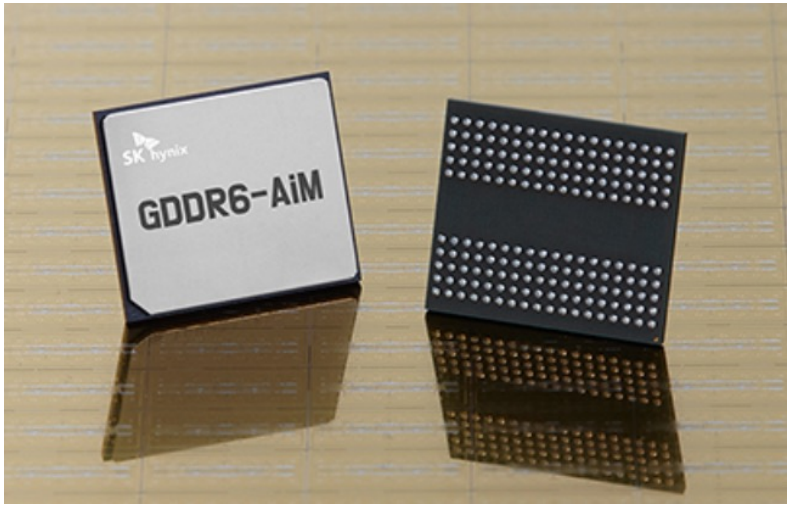

11.1 A 1ynm 1.25V 8Gb, 16Gb/s/pin GDDR6-based Accelerator-in-Memory supporting 1TFLOPS MAC Operation and Various Activation Functions for Deep-Learning Applications

Seongju Lee, SK hynix, Icheon, Korea

In Paper 11.1, SK Hynix describes an 1ynm, GDDR6-based accelerator-in-memory with a command set for deep-learning operation. The 8Gb design achieves a peak throughput of 1TFLOPS with 1GHz MAC operations and supports major activation functions to improve accuracy.

SK Hynix Accelerator-in-Memory (2022)

- 4 Gb AiM die with 16 processing units (PUs)

AiM Die Photograph

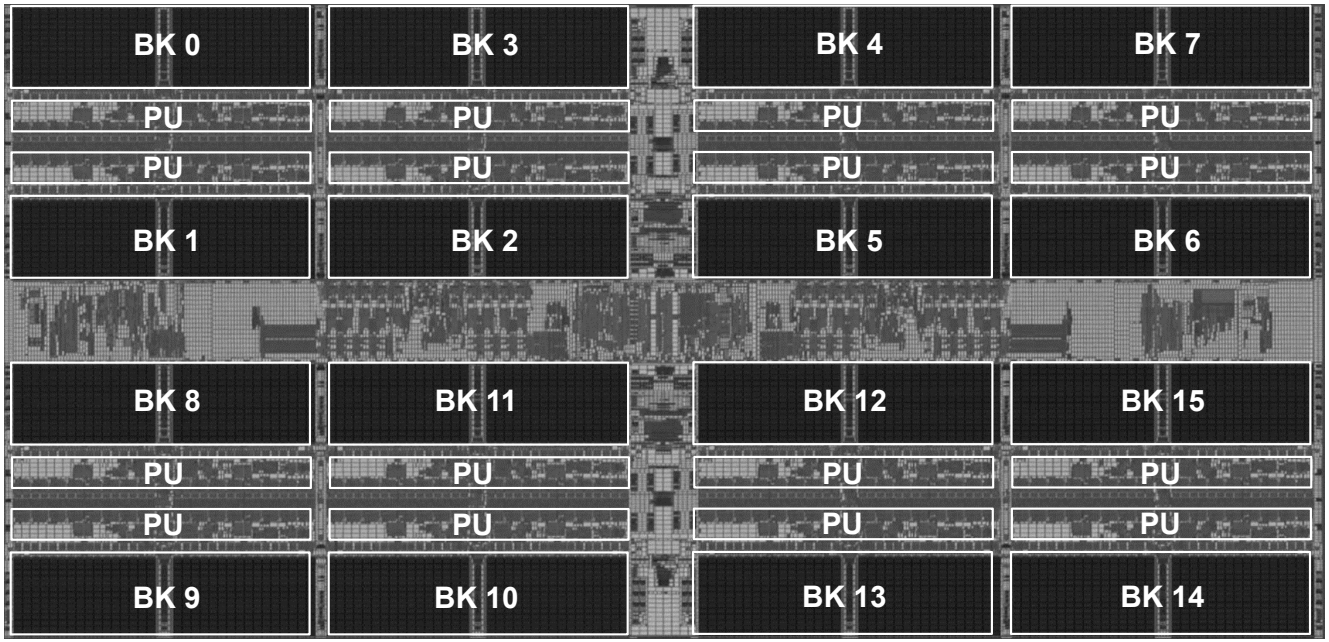

1 Process Unit (PU) Area

Total	0.19mm^2
MAC	0.11mm^2
Activation Function (AF)	0.02mm^2
Reservoir Cap.	0.05mm^2
Etc.	0.01mm^2

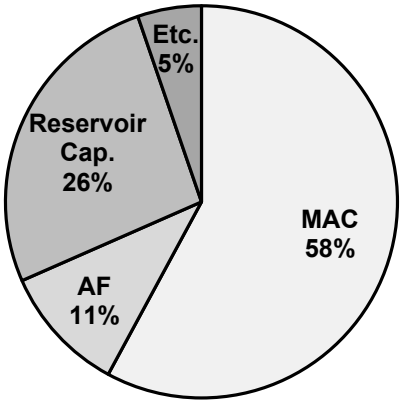

Lee et al., A 1ynm 1.25V 8Gb, 16Gb/s/pin GDDR6-based Accelerator-in-Memory supporting 1TFLOPS MAC Operation and Various Activation Functions for Deep-Learning Applications, ISSCC 2022

SK Hynix AiM: System Organization (2022)

- GDDR6-based AiM architecture

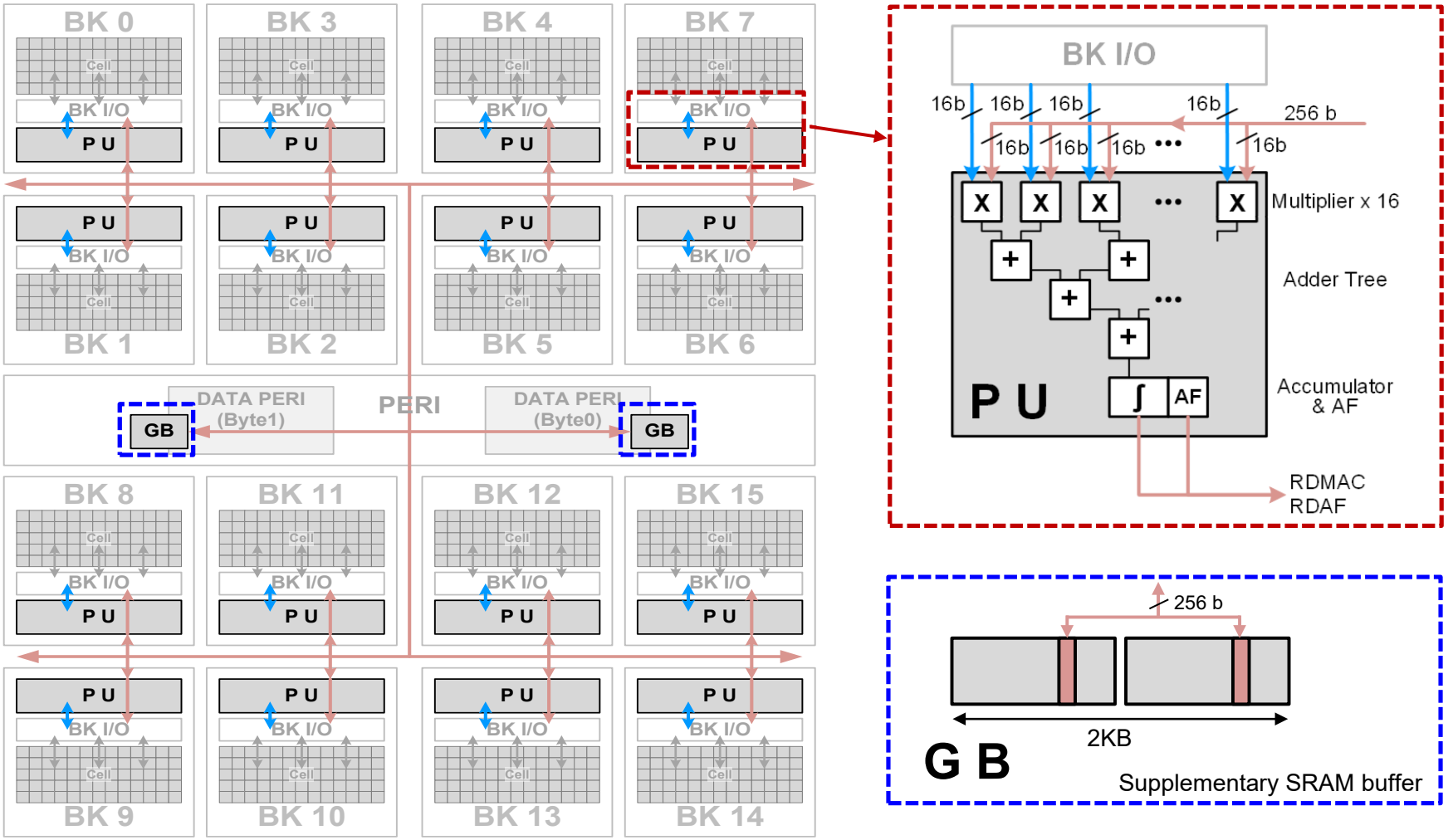

Lee et al., A 1ynm 1.25V 8Gb, 16Gb/s/pin GDDR6-based Accelerator-in-Memory supporting 1TFLOPS MAC Operation and Various Activation Functions for Deep-Learning Applications, ISSCC 2022

Lecture on Accelerator-in-Memory

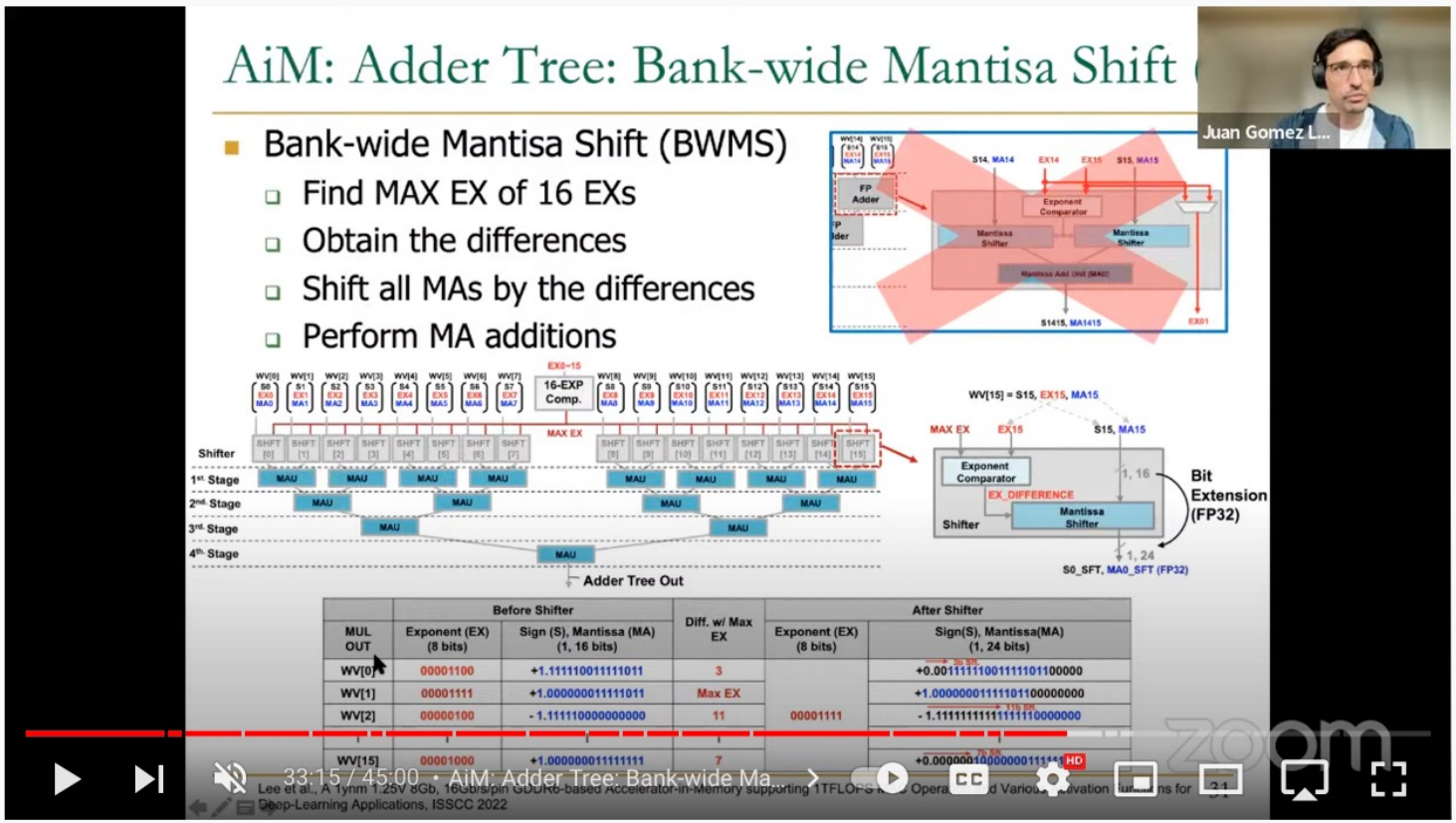

Processing-in-Memory Course: Lecture 6: Real-world PIM: SK Hynix AiM - Spring 2022

607 views • Streamed live on Apr 14, 2022

23 DISLIKE SHARE CLIP SAVE ...

Onur Mutlu Lectures

25.9K subscribers

SUBSCRIBED

https://youtu.be/NDL77Xdccbs?t=159

Alibaba HB-PNM

Alibaba HB-PNM: Overall Architecture (2022)

- 3D-stacked logic die and DRAM die vertically bonded by hybrid bonding (HB)

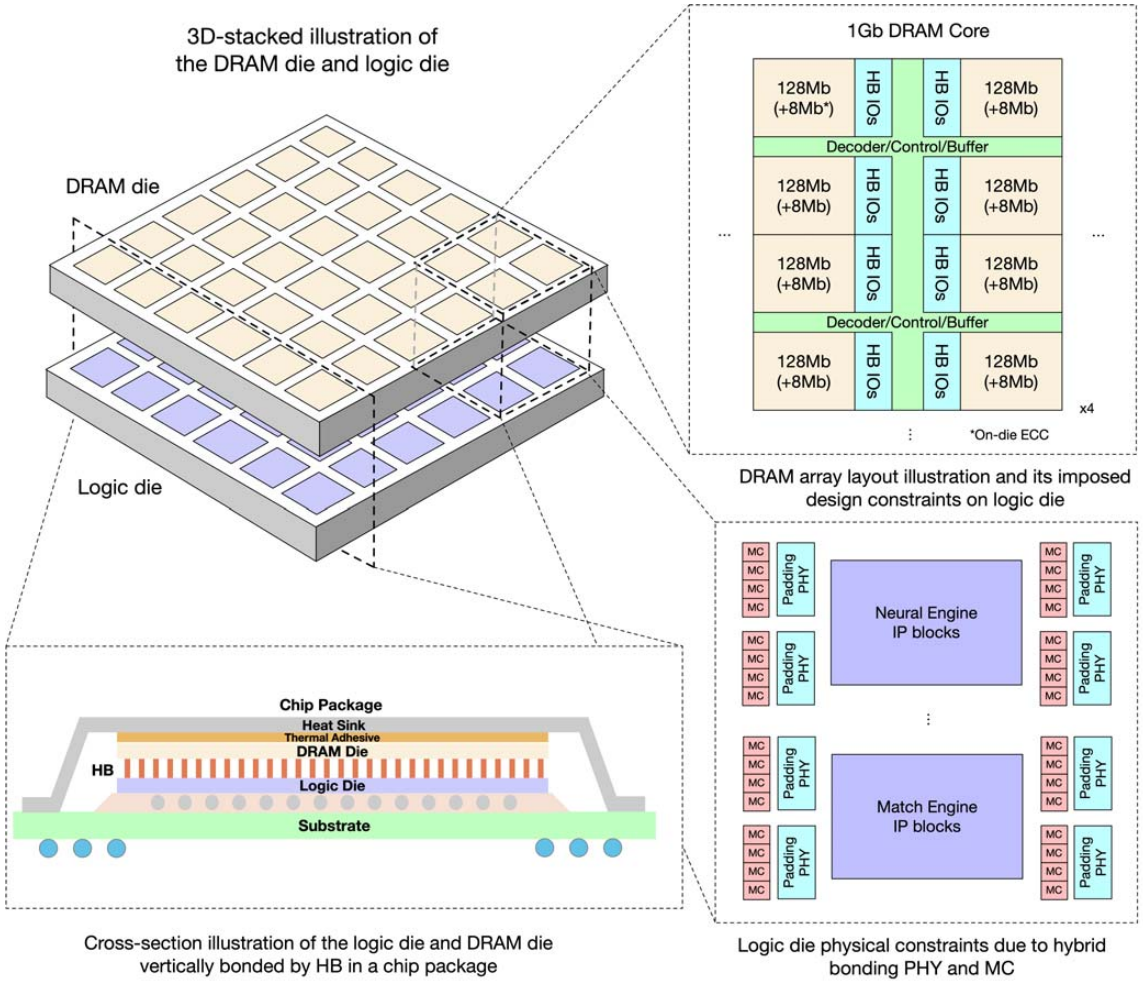

Niu et al., 184QPS/W 64Mb/mm2 3D Logic-to-DRAM Hybrid Bonding with Process-Near-Memory Engine for Recommendation System, ISSCC 2022

Alibaba HB-PNM: Compute Engines

- Match engine and neural engine for matching and ranking in a recommendation system

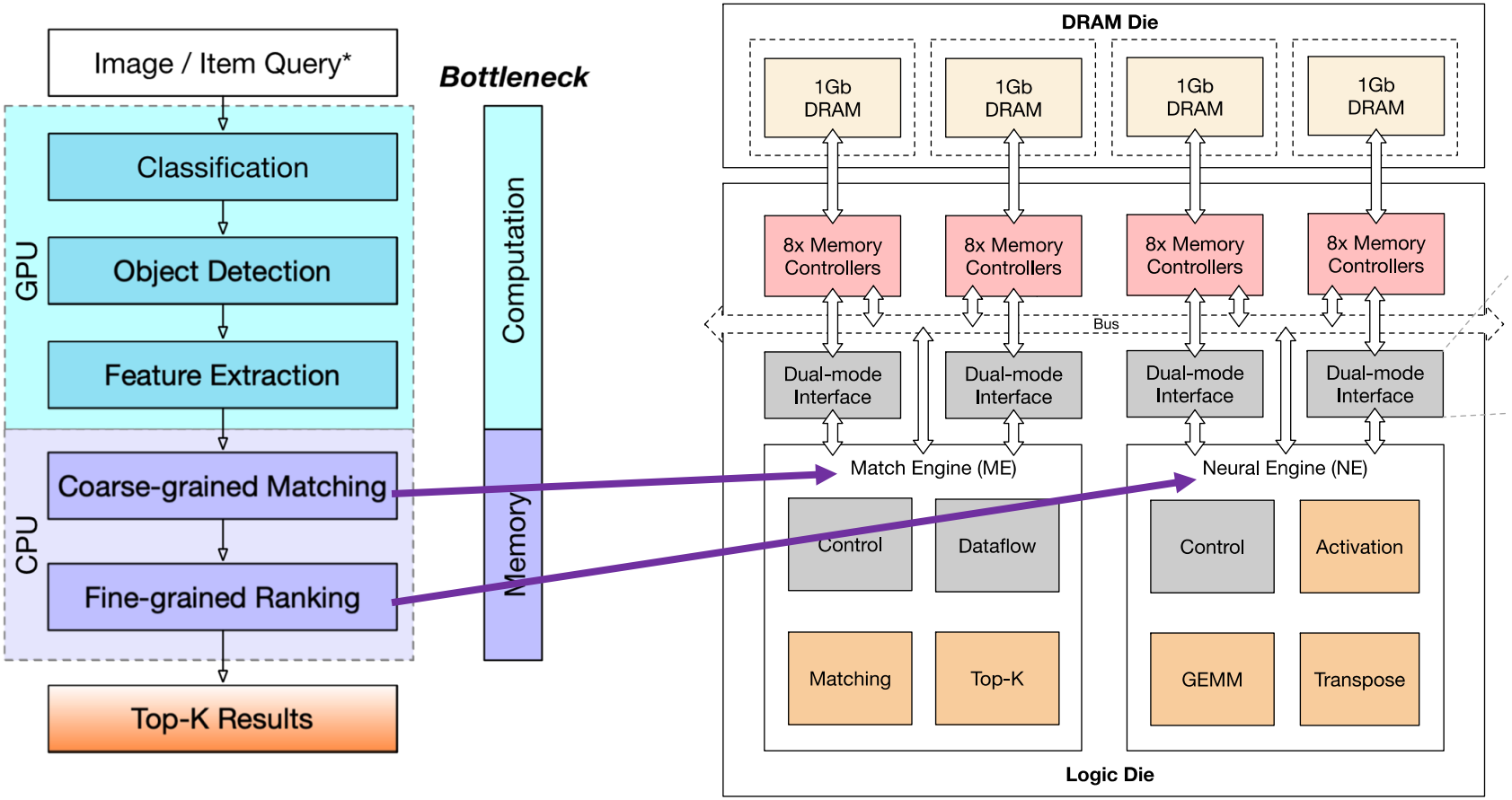

Niu et al., 184QPS/W 64Mb/mm2 3D Logic-to-DRAM Hybrid Bonding with Process-Near-Memory Engine for Recommendation System, ISSCC 2022

Lecture on HB-PNM

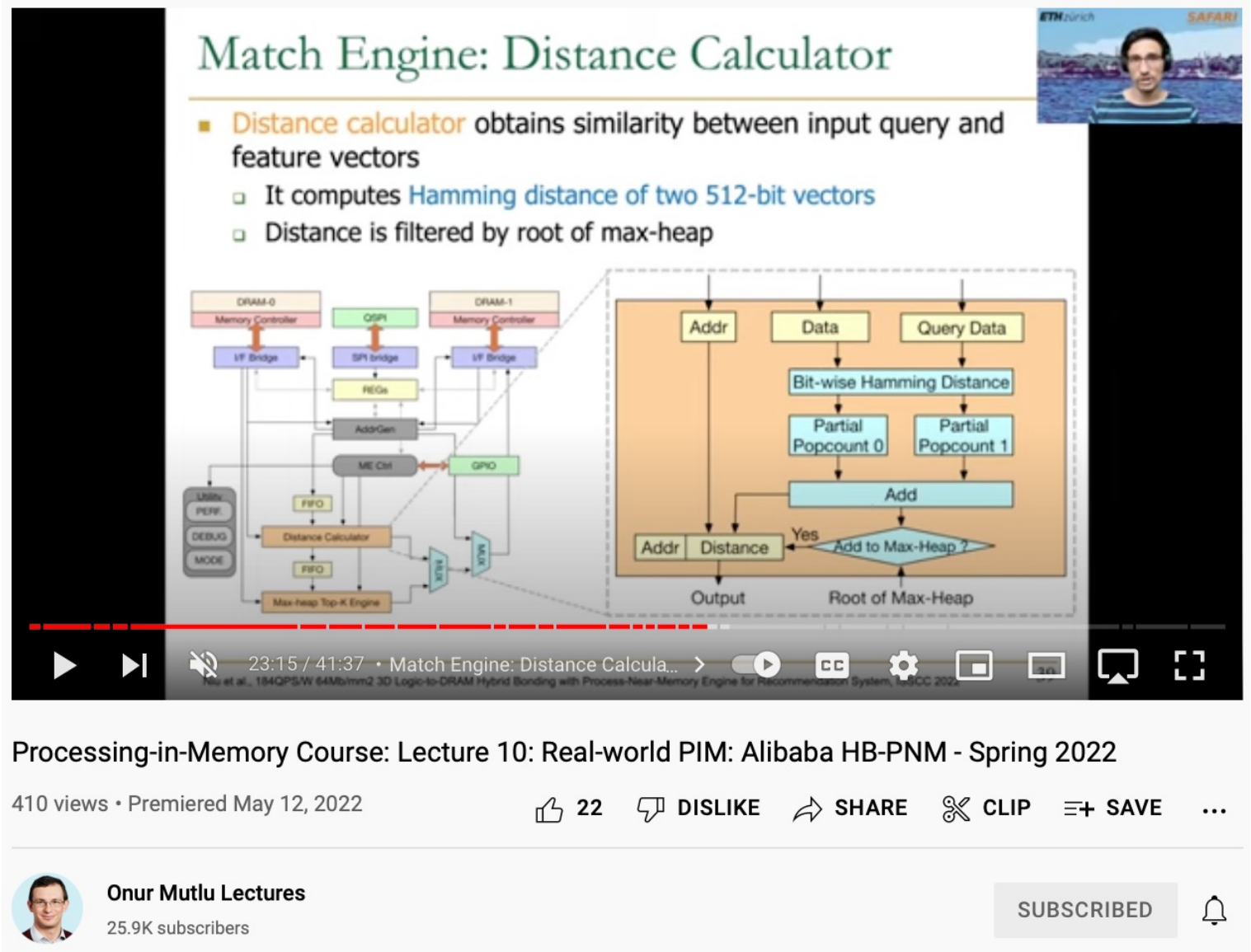

https://youtu.be/OZjKnn-DbwA

More Real PIM

NeuroBlade

BLOCKS & FILES.

HOME BLOCK FILE OBJECT DISK TAPE FLASH NVME SC

Home › AI/ML › NeuroBladers build a processing-in-memory analytics chip and server

AI/ML Block Flash NVME

NeuroBladers build a processing-in-memory analytics chip and server

By **Chris Mellor** - October 6, 2021

An Israeli startup called NeuroBlade has exited stealth mode, built a processing-in-memory (PIM) analytics chip combining DRAM and thousands of cores, put four of them in an analytics accelerating server appliance box, and taken in $83 million in B-round funding.

The idea is to take a GPU approach to big data-style analytics and AI software by employing a massively parallel core design, but take it further by layering the cores on DRAM with a wide I/O bus architecture design linking the cores and memory to speed processing even more. This design vastly reduces data movement between storage and memory and also accelerates data transfer between memory and processing cores.

https://blocksandfiles.com/2021/10/06/neurobladers-build-a-processing-in-memory-analytics-chip-and-server/

NeuroBlade Patent (I)

(12) **United States Patent**
Sity et al.

(10) **Patent No.: US 10,762,034 B2**
(45) **Date of Patent: Sep. 1, 2020**

(54) **MEMORY-BASED DISTRIBUTED PROCESSOR ARCHITECTURE**

(71) Applicant: **NeuroBlade, Ltd.**, Hod-Hashron (IL)

(72) Inventors: **Elad Sity**, Kfar Saba (IL); **Eliad Hillel**, Kfar Saba (IL)

(73) Assignee: **NeuroBlade, Ltd.**, Hod-Hashron (IL)

(*) Notice: Subject to any disclaimer, the term of this patent is extended or adjusted under 35 U.S.C. 154(b) by 0 days.

(21) Appl. No.: **16/512,590**

(22) Filed: **Jul. 16, 2019**

(56) **References Cited**

U.S. PATENT DOCUMENTS

4,837,747 A * 6/1989 Dosaka G11C 8/12 365/189.05

5,155,729 A 10/1992 Rysko et al.

(Continued)

FOREIGN PATENT DOCUMENTS

CA 2 149 479 C 5/2001

OTHER PUBLICATIONS

Ahn et al., "A Scalable Processing-in-Memory Accelerator for Parallel Graph Processing," ISCA '15 (Jun. 13-17, 2015), pp. 105-117.

(57) **ABSTRACT**

Distributed processors and methods for compiling code for execution by distributed processors are disclosed. In one implementation, a distributed processor may include a substrate; a memory array disposed on the substrate; and a processing array disposed on the substrate. The memory array may include a plurality of discrete memory banks, and the processing array may include a plurality of processor subunits, each one of the processor subunits being associated with a corresponding, dedicated one of the plurality of discrete memory banks. The distributed processor may further include a first plurality of buses, each connecting one of the plurality of processor subunits to its corresponding, dedicated memory bank, and a second plurality of buses, each connecting one of the plurality of processor subunits to another of the plurality of processor subunits.

Sity et al., "Memory-based Distributed Processor Architecture," US 10,762,034 B2

NeuroBlade Patent (II)

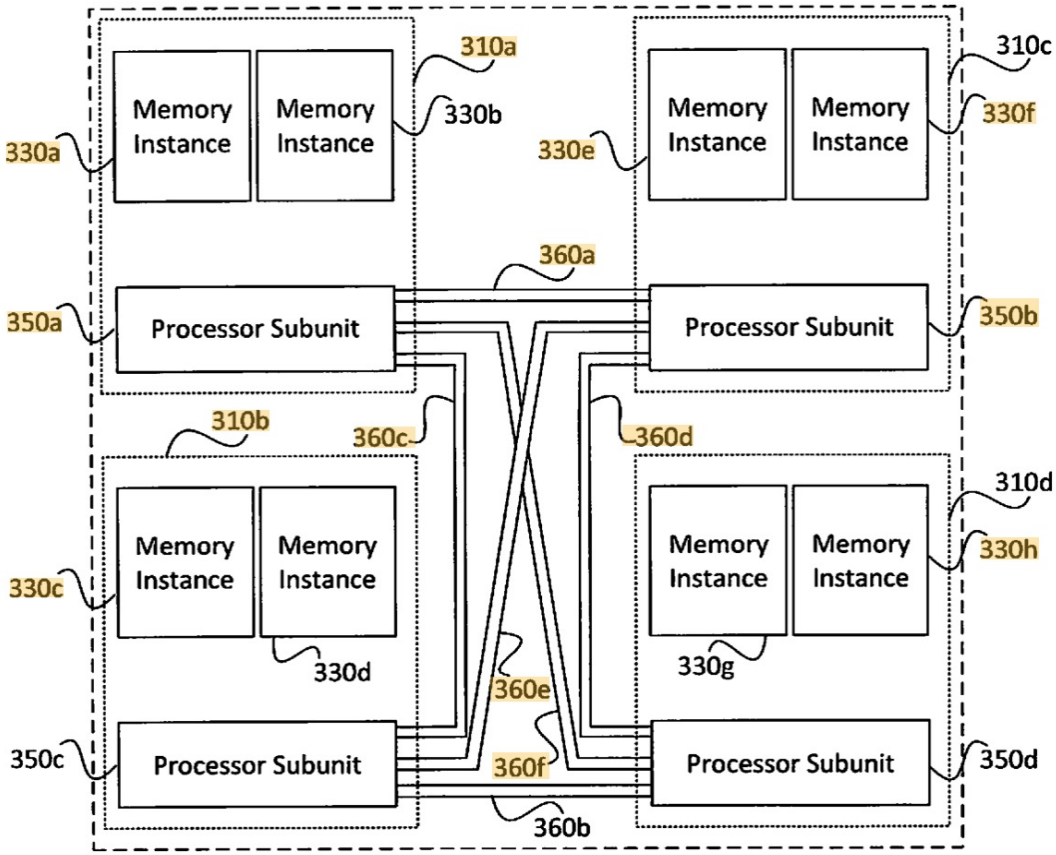

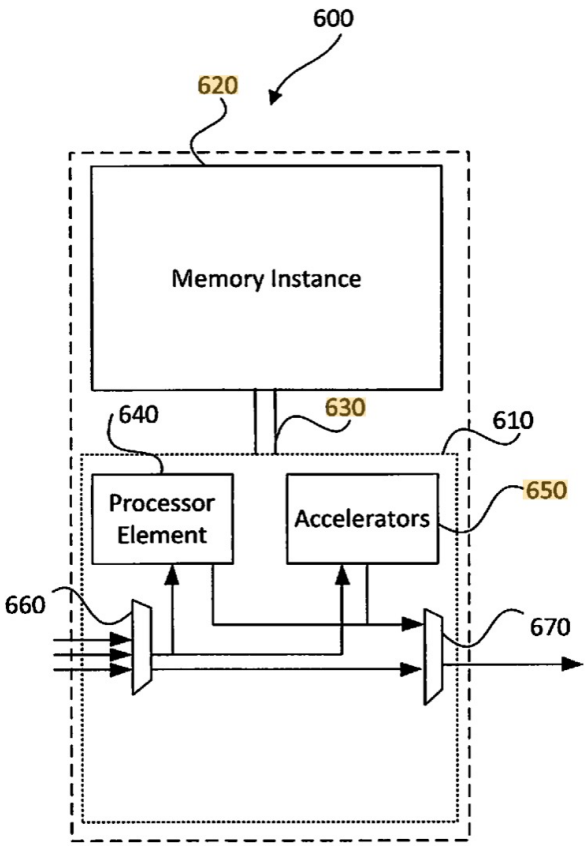

Sity et al., “Memory-based Distributed Processor Architecture,” US 10,762,034 B2

NeuroBlade: Xiphos

- PIM XRAM chip
  - IMPU (Intensive Memory Processing Unit)
- x86 CPU, 32 NVMe SSDs
- PCIe fabric: "Everything is connected on top of PCIe fabric."
- Wide I/O bus: multiple x16 PCIe buses

Xiphos appliance.

Variety of Current Real PIM Architectures

- Differences
  - Near-bank (UPMEM, FIMDRAM, AiM, HB-PNM) vs. near-chip (AxDIMM)
  - General-purpose (UPMEM) vs. special-function (FIMDRAM, AiM, HB-PNM)
  - FGMT (UPMEM) vs. SIMD (FIMDRAM, AiM, AxDIMM) vs. systolic array (HB-PNM)
  - Natively integer (UPMEM, HB-PNM) vs. floating point (FIMDRAM)
    - FP16 (FIMDRAM) vs. BF16 (AiM) vs. FP32 (AxDIMM)
  - DDR4 (UPMEM, AxDIMM) vs. LPDDR4 (HB-PNM) vs. HBM2 (FIMDRAM) vs. GDDR6 (AiM)

Common Characteristics

- These PIM systems have some common characteristics:

1. There is a host processor (CPU or GPU) with access to (1) standard main memory, and (2) PIM-enabled memory
2. PIM-enabled memory contains multiple PIM processing elements (PEs) with high bandwidth and low latency memory access
3. PIM PEs run only at a few hundred MHz and have a small number of registers and small (or no) cache/scratchpad
4. PEs may need to communicate via the host processor

A State-of-the-Art PIM (PNM) System

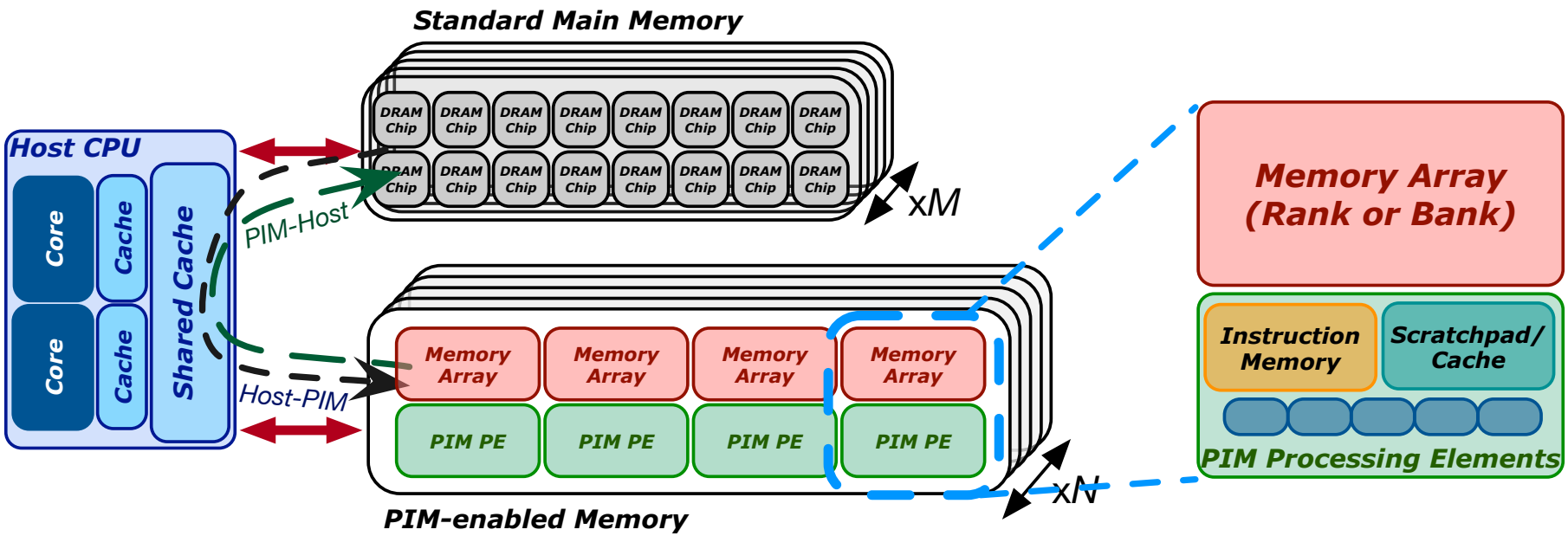

- These PIM systems have some common characteristics:
  1. There is a host processor (CPU or GPU) with access to (1) standard main memory, and (2) PIM-enabled memory
  2. PIM-enabled memory contains multiple PIM processing elements (PEs) with high bandwidth and low latency memory access
  3. PIM PEs run only at a few hundred MHz and have a small number of registers and small (or no) cache/scratchpad
  4. PEs may need to communicate via the host processor

Programming a General-purpose PIM System

Accelerator Model (I)

- UPMEM DIMMs coexist with conventional DIMMs
- Integration of UPMEM DIMMs in a system follows an accelerator model
- UPMEM DIMMs can be seen as a loosely coupled accelerator
  - Explicit data movement between the main processor (host CPU) and the accelerator (UPMEM)
  - Explicit kernel launch onto the UPMEM processors
- This resembles GPU computing

GPU Computing

- Computation is offloaded to the GPU
- Three steps
  - CPU-GPU data transfer (1)
  - GPU kernel execution (2)
  - GPU-CPU data transfer (3)

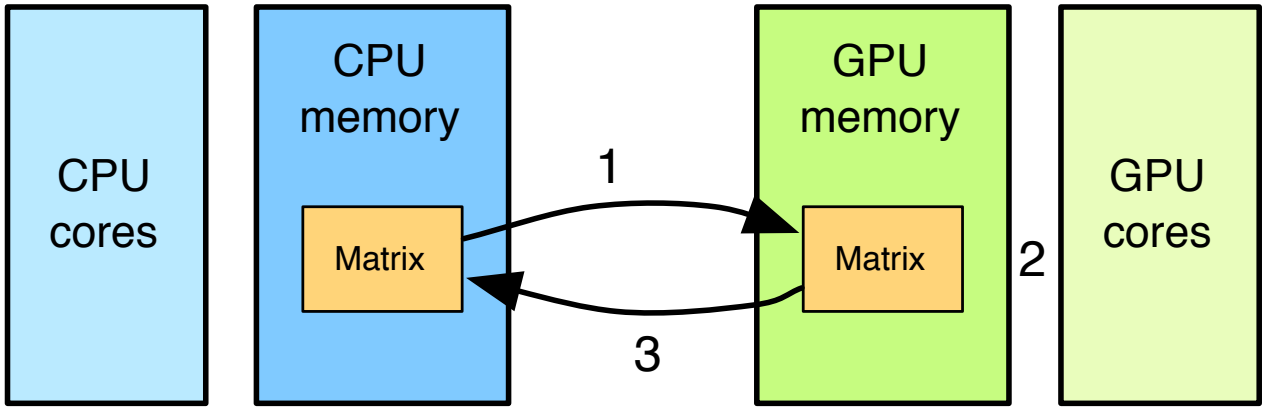

https://www.youtube.com/watch?v=y40-tY5WJ8A
https://safari.ethz.ch/digitaltechnik/spring2018/lib/exe/fetch.php?media=digitaldesign-2018-lecture22-gpuprogramming-afterlecture.pdf

Accelerator Model (II)

- *FIG. 6 is a flow diagram representing operations in a method of delegating a processing task to a DRAM processor according to an example embodiment*

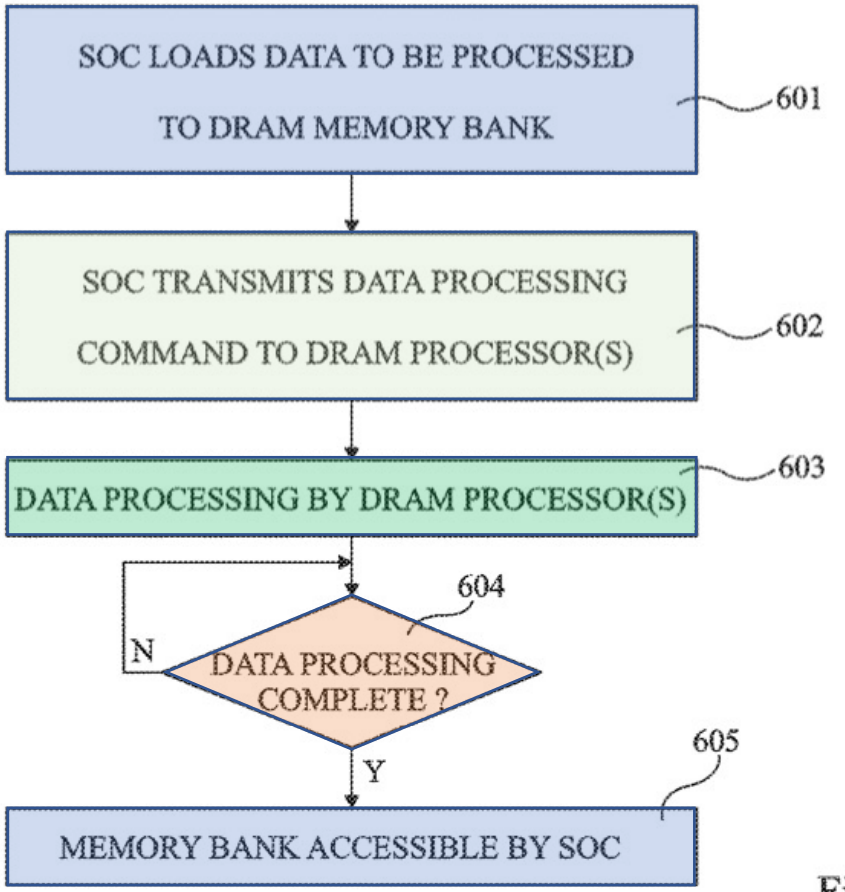

Fig 6

Fabrice Devaux, Jean-François Roy. "Memory circuit with integrated processor." US 10,324,870 B2.

System Organization

- *FIG. 1 schematically illustrates a computing system comprising DRAM circuits having integrated processors according to an example embodiment*

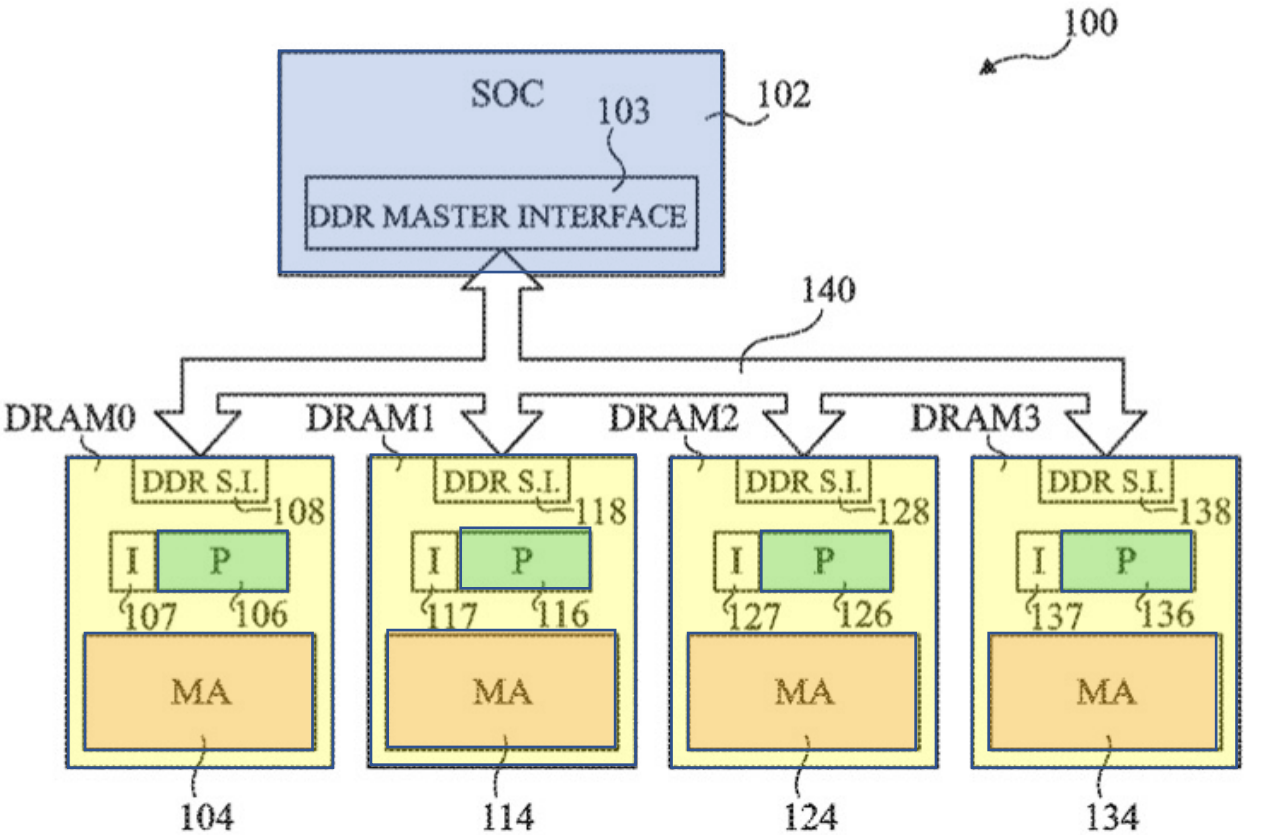

Fig 1

Fabrice Devaux, Jean-François Roy. "Memory circuit with integrated processor." US 10,324,870 B2.

First Programming Example: Vector Addition

Observations, Recommendations, Takeaways

GENERAL PROGRAMMING RECOMMENDATIONS

1. Execute on the *DRAM Processing Units* (*DPUs*) **portions of parallel code** that are as long as possible.
2. Split the workload into **independent data blocks**, which the DPUs operate on independently.
3. Use **as many working DPUs** in the system as possible.
4. Launch at least **11 *tasklets* (i.e., software threads)** per DPU.

PROGRAMMING RECOMMENDATION 1

For data movement between the DPU's MRAM bank and the WRAM, **use large DMA transfer sizes when all the accessed data is going to be used**.

KEY OBSERVATION 7

Larger CPU-DPU and DPU-CPU transfers between the host main memory and the DRAM Processing Unit's Main memory (MRAM) banks **result in higher sustained bandwidth**.

KEY TAKEAWAY 1

The UPMEM PIM architecture is fundamentally compute bound. As a result, **the most suitable work- loads are memory-bound.**

Vector Addition (VA)

- Our first programming example
- We partition the input arrays across:
  - DPUs
  - Tasklets, i.e., software threads running on a DPU

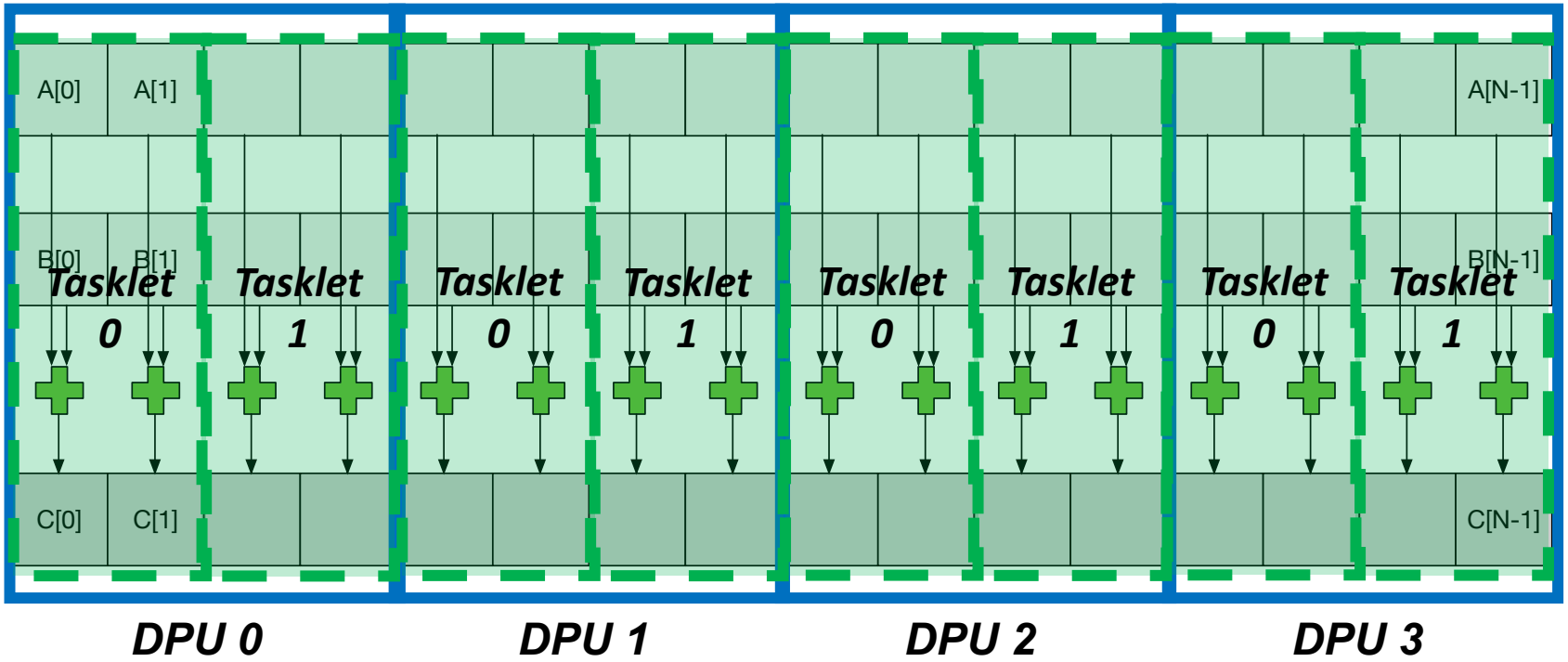

UPMEM SDK Documentation

up mem

2023.1.0

Search docs

GETTING STARTED

The UPMEM DPU toolchain

Installing the UPMEM DPU toolchain

Hello World! Example

PROGRAMMING

Introduction

Tasklet management and synchronization

Memory management

Standard library functions

Exceptions

Controlling the execution of DPUs from host applications

Communication with host applications

Advanced Features of the Host API

Logging

/ User Manual

User Manual

Getting started

- The UPMEM DPU toolchain
  - Notes before starting
  - The toolchain purpose
  - dpu-upmem-dpurte-clang
    - Limitations
  - The DPU Runtime Library
  - The Host Library
  - dpu-lldb
- Installing the UPMEM DPU toolchain
  - Dependencies
    - Python
  - Installation packages
    - Installation from tar.gz binary archive
  - Functional simulator
- Hello World! Example
  - Purpose
  - Writing and building the program

General Programming Recommendations

- From UPMEM programming guide*, presentations★, and white papers☆

GENERAL PROGRAMMING RECOMMENDATIONS

1. Execute on the *DRAM Processing Units* (*DPUs*) **portions of parallel code** that are as long as possible.
2. Split the workload into **independent data blocks**, which the DPUs operate on independently.
3. Use **as many working DPUs** in the system as possible.
4. Launch at least **11 *tasklets* (i.e., software threads)** per DPU.

* https://sdk.upmem.com/2021.1.1/index.html
★ F. Devaux, "The true Processing In Memory accelerator," HotChips 2019. doi: 10.1109/HOTCHIPS.2019.8875680
☆ UPMEM, "Introduction to UPMEM PIM. Processing-in-memory (PIM) on DRAM Accelerator," White paper

DPU Allocation

- `dpu_alloc()` allocates a number of DPUs
  - Creates a `dpu_set`

```
struct dpu_set_t dpu_set, dpu;
uint32_t nr_of_dpus;

// Allocate DPUs
DPU_ASSERT(dpu_alloc(NR_DPUS, NULL, &dpu_set));

DPU_ASSERT(dpu_get_nr_dpus(dpu_set, &nr_of_dpus));
printf("Allocated %d DPU(s)\n", nr_of_dpus);
```

Can we allocate different DPU sets over the course of a program?

Yes, we can. We show an example next

We deallocate a DPU set with `dpu_free()`

DPU Allocation: Needleman-Wunsch (NW)

- In NW we change the number of DPUs in the DPU set as computation progresses

```
// Top-left computation on DPUs
for (unsigned int blk = 1; blk <= (max_cols-1)/BL; blk++) {

    // If nr_of_blocks are lower than max_dpus,
    // set nr_of_dpus to be equal with nr_of_blocks
    unsigned nr_of_blocks = blk;
    if (nr_of_blocks < max_dpus) {
        DPU_ASSERT(dpu_free(dpu_set));
        DPU_ASSERT(dpu_alloc(nr_of_blocks, NULL, &dpu_set));
        DPU_ASSERT(dpu_load(dpu_set, DPU_BINARY, NULL));
        DPU_ASSERT(dpu_get_nr_dpus(dpu_set, &nr_of_dpus));
    } else if (nr_of_dpus == max_dpus) {
        ;
    } else {
        DPU_ASSERT(dpu_free(dpu_set));
        DPU_ASSERT(dpu_alloc(max_dpus, NULL, &dpu_set));
        DPU_ASSERT(dpu_load(dpu_set, DPU_BINARY, NULL));
        DPU_ASSERT(dpu_get_nr_dpus(dpu_set, &nr_of_dpus));
    }

    ...
}
```

Load DPU Binary

- `dpu_load()` loads a program in all DPUs of a `dpu_set`

```
// Define the DPU Binary path as DPU_BINARY here
#ifndef DPU_BINARY
#define DPU_BINARY "./bin/dpu_code"
#endif

    ...

    // Load binary
    DPU_ASSERT(dpu_load(dpu_set, DPU_BINARY, NULL));
```

Is it possible to launch different kernels onto different DPUs?

Yes, it is possible. This enables:

- Workloads with task-level parallelism
- Different programs using different DPU sets

CPU-DPU/DPU-CPU Data Transfers

- CPU-DPU and DPU-CPU transfers
  - Between host CPU's main memory and DPUs' MRAM banks

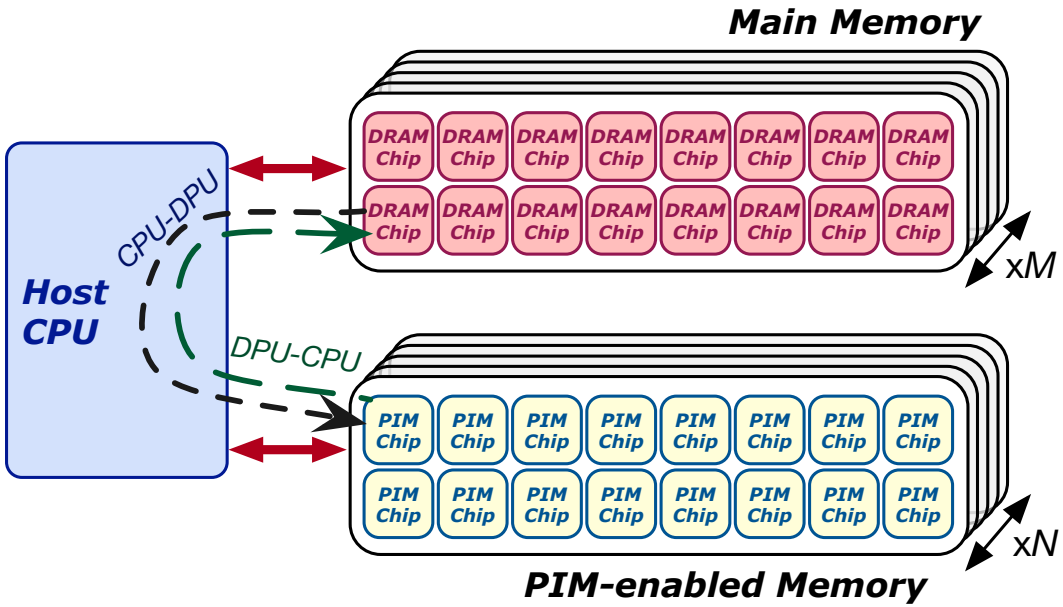

- Serial CPU-DPU/DPU-CPU transfers:
  - A single DPU (i.e., 1 MRAM bank)
- Parallel CPU-DPU/DPU-CPU transfers:
  - Multiple DPUs (i.e., many MRAM banks)
- Broadcast CPU-DPU transfers:
  - Multiple DPUs with a single buffer

Serial Transfers

- `dpu_copy_to();`
- `dpu_copy_from();`
- We transfer (part of) a buffer to/from each DPU in the `dpu_set`
- `DPU_MRAM_HEAP_POINTER_NAME`: Start of the MRAM range that can be freely accessed by applications
  - We do not allocate MRAM explicitly

```
DPU_FOREACH (dpu_set, dpu) {
    DPU_ASSERT(dpu_copy_to(dpu, DPU_MRAM_HEAP_POINTER_NAME, 0, bufferA + input_size_dpu_8bytes * i, input_size_dpu_8bytes * sizeof(T)));
    DPU_ASSERT(dpu_copy_to(dpu, DPU_MRAM_HEAP_POINTER_NAME, input_size_dpu_8bytes * sizeof(T), bufferB + input_size_dpu_8bytes * i, input_size_dpu_8bytes * sizeof(T)));
    i++;
}
```

Offset within MRAM | Pointer to main memory | Transfer size

Parallel Transfers

- We push different buffers to/from a DPU set in one transfer
  - All buffers need to be of the same size
- First, prepare (`dpu_prepare_xfer`);

  then, push (`dpu_push_xfer`)
- Direction:
  - `DPU_XFER_TO_DPU`
  - `DPU_XFER_FROM_DPU`

```
DPU_FOREACH(dpu_set, dpu, i) {
    DPU_ASSERT(dpu_prepare_xfer(dpu, bufferA + input_size_dpu_8bytes * i))
}
DPU_ASSERT(dpu_push_xfer(dpu_set, DPU_XFER_TO_DPU  DPU_MRAM_HEAP_POINTER_NAME, 0,  input_size_dpu_8bytes * sizeof(T)  DPU_XFER_DEFAULT));

DPU_FOREACH(dpu_set, dpu, i) {
    DPU_ASSERT(dpu_prepare_xfer(dpu, bufferB + input_size_dpu_8bytes * i))
}
DPU_ASSERT(dpu_push_xfer(dpu_set, DPU_XFER_TO_DPU  DPU_MRAM_HEAP_POINTER_NAME, input_size_dpu_8bytes * sizeof(T)  input_size_dpu_8bytes * sizeof(T)  DPU_XFER_DEFAULT));
```

Pointer to main memory

Offset within MRAM

Transfer size

Direction

Broadcast Transfers

- `dpu_broadcast_to();`
  - Only CPU to DPU
- We transfer the same buffer to all DPUs in the `dpu_set`

```
DPU_ASSERT(dpu_broadcast_to(dpu_set, DPU_MRAM_HEAP_POINTER_NAME, 0, bufferA, input_size_dpu * sizeof(T), DPU_XFER_DEFAULT));
```

Pointer to main memory

Transfer size

Different Types of Transfers in a Program

- An example benchmark that uses both parallel and serial transfers
- Select (SEL)
  - Remove even values

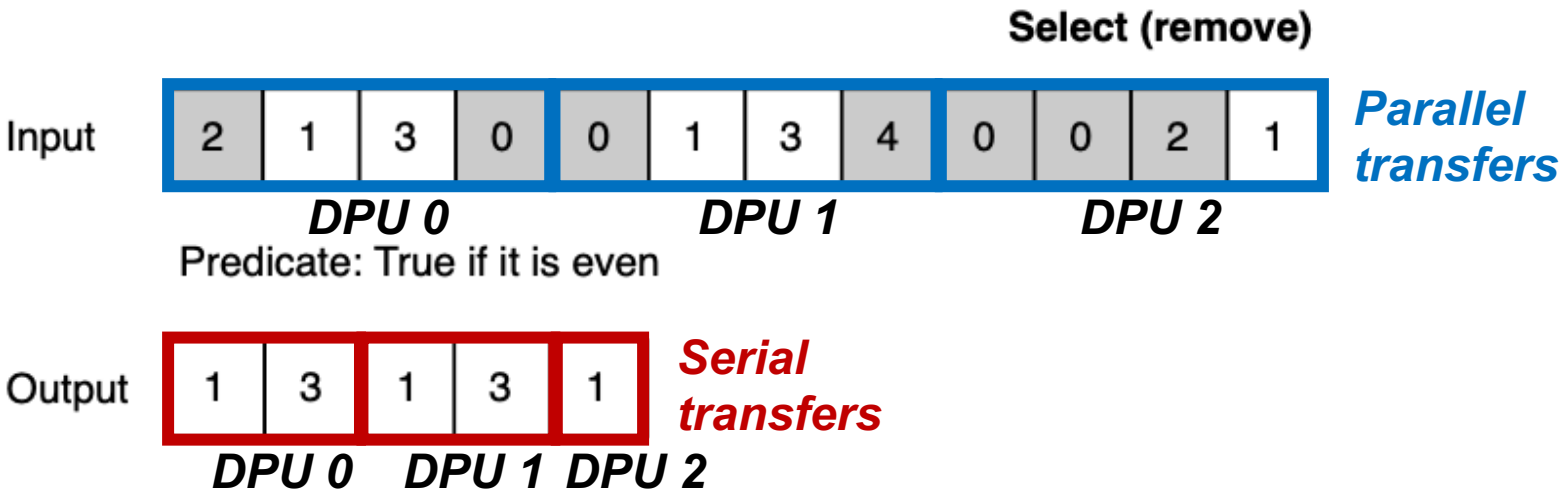

Inter-DPU Communication

- There is no direct communication channel between DPUs

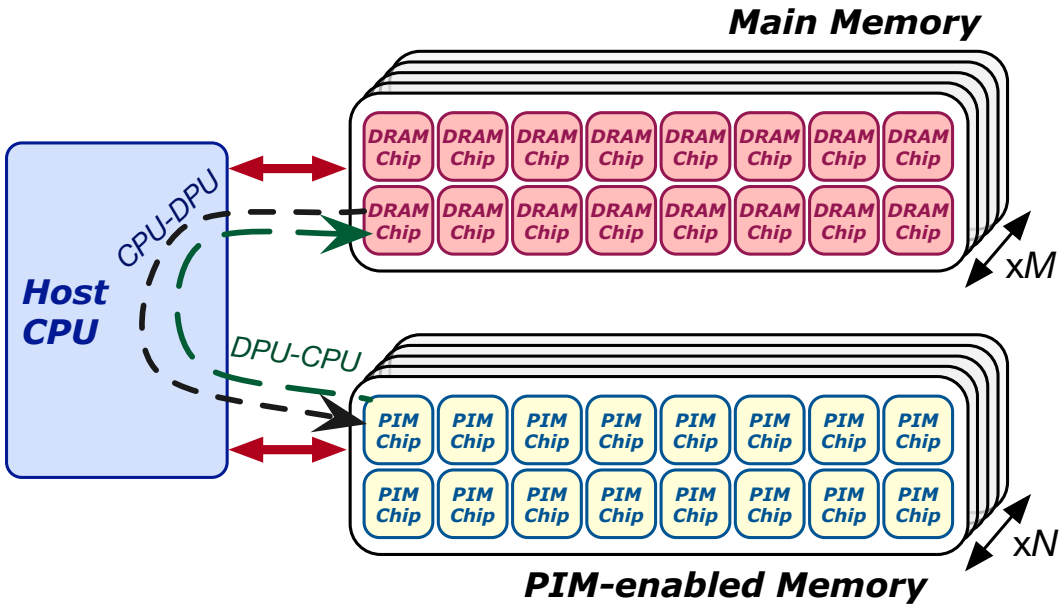

- Inter-DPU communication takes place via the host CPU using CPU-DPU and DPU-CPU transfers
- Example communication patterns:
  - Merging of partial results to obtain the final result
    - Only DPU-CPU transfers
  - Redistribution of intermediate results for further computation
    - DPU-CPU transfers and CPU-DPU transfers

How Fast are these Data Transfers?

- With a microbenchmark, we obtain the sustained bandwidth of all types of CPU-DPU and DPU-CPU transfers
- Two experiments:
  - 1 DPU: variable CPU-DPU and DPU-CPU transfer size (8 bytes to 32 MB)
  - 1 rank: 32 MB CPU-DPU and DPU-CPU transfers to/from a set of 1 to 64 MRAM banks within the same rank
- Preliminary experiments with more than one rank
  - Channel-level parallelism

DDR4 bandwidth bounds the maximum transfer bandwidth

The cost of the transfers can be amortized,
if enough computation is run on the DPUs

CPU-DPU/DPU-CPU Transfers: 1 DPU

- Data transfer size varies between 8 bytes and 32 MB

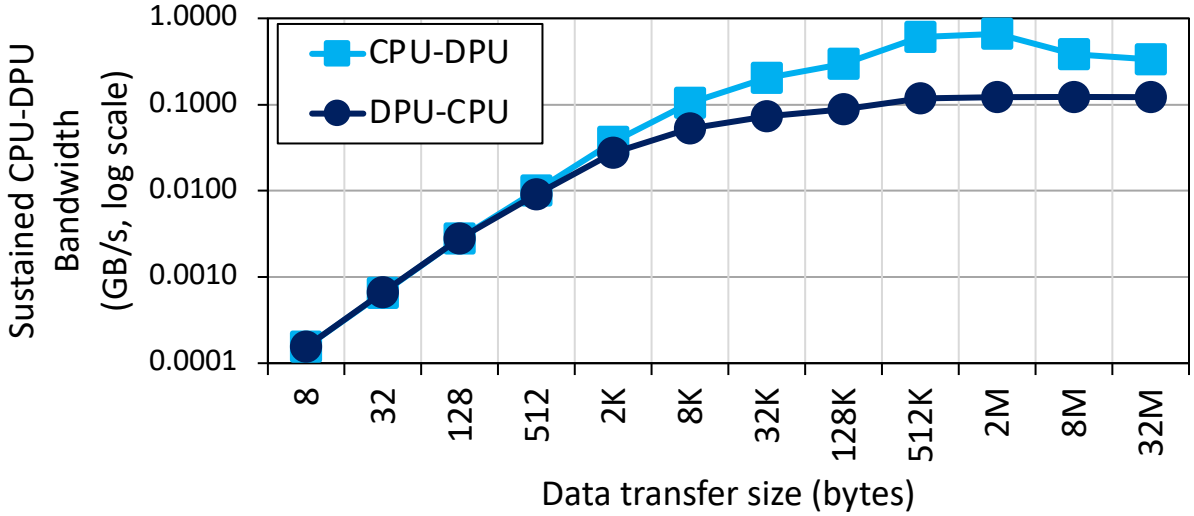

KEY OBSERVATION 7

Larger CPU-DPU and DPU-CPU transfers between the host main memory and the DRAM Processing Unit's Main memory (MRAM) banks **result in higher sustained bandwidth**.

CPU-DPU/DPU-CPU Transfers: 1 Rank (I)

- CPU-DPU (serial/parallel/broadcast) and DPU-CPU (serial/parallel)
- The number of DPUs varies between 1 and 64

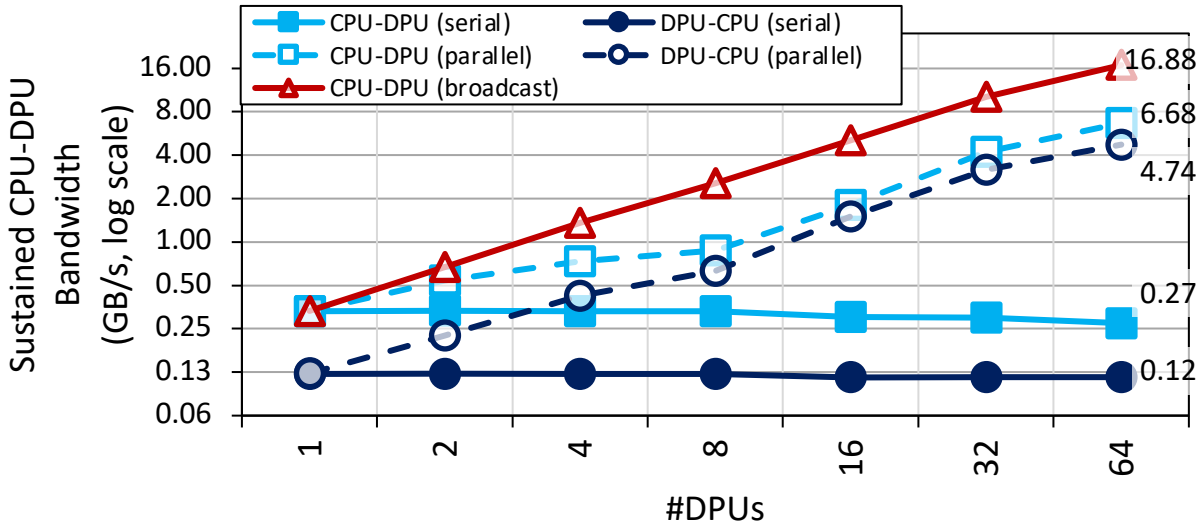

KEY OBSERVATION 8

The **sustained bandwidth of parallel CPU-DPU and DPU-CPU transfers** between the host main memory and the DRAM Processing Unit's Main memory (MRAM) banks **increases with the number of DRAM Processing Units inside a rank.**

CPU-DPU/DPU-CPU Transfers: 1 Rank (II)

- CPU-DPU (serial/parallel/broadcast) and DPU-CPU (serial/parallel)
- The number of DPUs varies between 1 and 64

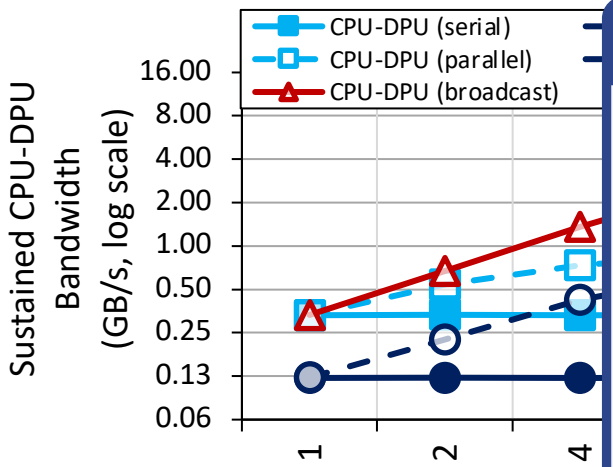

KEY OBSERVATION 9

The sustained bandwidth of parallel CPU-DPU transfers is higher than the sustained bandwidth of parallel DPU-CPU transfers **due to different implementations** of CPU-DPU and DPU-CPU transfers **in the UPMEM runtime library.**

The sustained bandwidth of broadcast CPU-DPU transfers (i.e., the same buffer is copied to multiple MRAM banks) **is higher than that of parallel CPU-DPU transfers** (i.e., different buffers are copied to different MRAM banks) **due to higher temporal locality** in the CPU cache hierarchy.

“Transposing” Library

The library feeds DPUs with correct data

Eight 64-bit “horizontal” words are turned into 8 vertical words, feeding 8 different DRAM chips

This way DPUs see full 64-bit words, not chunk of them

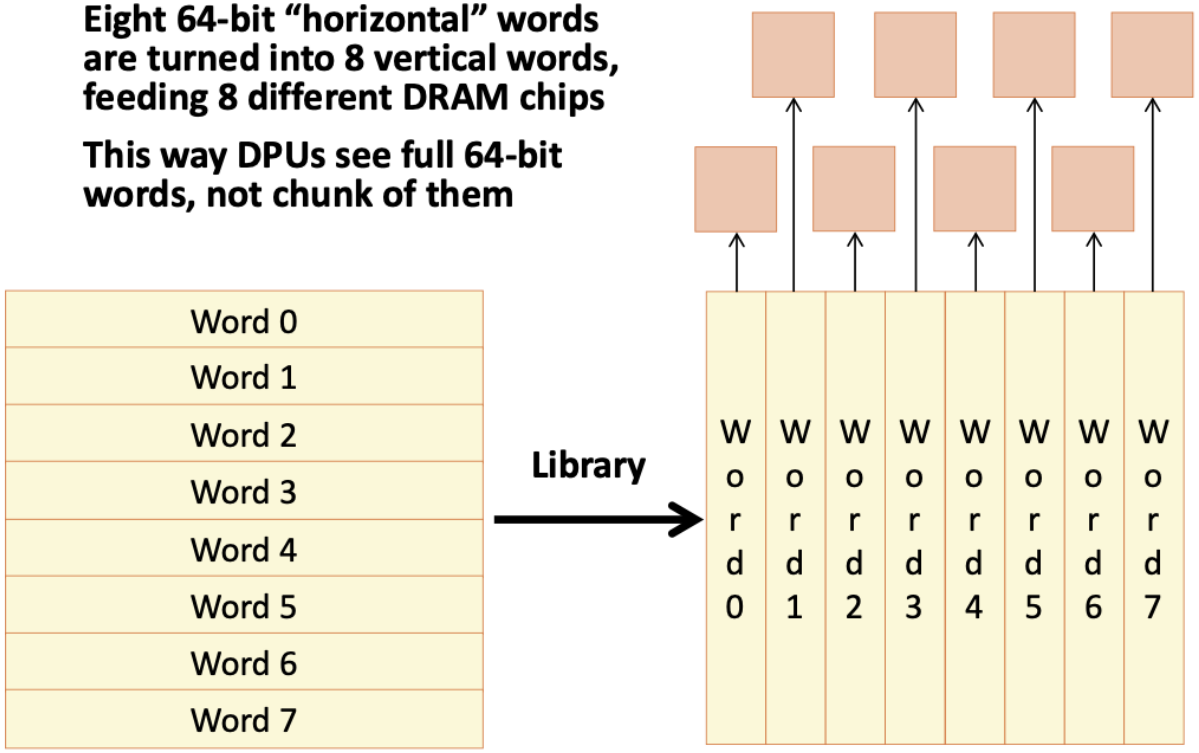

DRAM chip have 8-bit data bus

The transformation, a 8x8 matrix transposition, is done by the library inside a 64-byte cache line, thus very efficiently.

Copyright UPMEM® 2019

HOT CHIPS 31

up mem

Authorized licensed use limited to: ETH BIBLIOTHEK ZURICH. Downloaded on September 04,2020 at 13:55:41 UTC from IEEE Xplore. Restrictions apply.

F. Devaux, "The true Processing In Memory accelerator," HotChips 2019. doi: 10.1109/HOTCHIPS.2019.8875680

Microbenchmark: CPU-DPU

- CPU-DPU (serial/parallel/broadcast) and DPU-CPU (serial/parallel)

CMU-SAFARI / prim-benchmarks

Unwatch 2 | Star 1 | Fork 0

Code | Issues | Pull requests | Actions | Projects | Wiki | Security | Insights | Settings

main | prim-benchmarks / Microbenchmarks / CPU-DPU / | Go to file | Add file | ···

Juan Gomez Luna PrIM -- first commit 3de4b49 7 days ago History

..		
dpu	PrIM -- first commit	7 days ago
host	PrIM -- first commit	7 days ago
support	PrIM -- first commit	7 days ago
Makefile	PrIM -- first commit	7 days ago
run.sh	PrIM -- first commit	7 days ago

DPU Kernel Launch

- `dpu_launch()` launches a kernel on a `dpu_set`
  - `DPU_SYNCHRONOUS` suspends the application until the kernel finishes
  - `DPU_ASYNCHRONOUS` returns the control to the application
    - `dpu_sync` or `dpu_status` to check kernel completion

```
printf("Run program on DPU(s) \n");
// Run DPU kernel
DPU_ASSERT(dpu_launch(dpu_set, DPU_SYNCHRONOUS));
```

What does the asynchronous execution enable?

Some ideas:

- Task-level parallelism: concurrent execution of different kernels on different DPU sets
- Concurrent heterogeneous computation on CPU and DPUs

How to Pass Parameters to the Kernel?

- We can use serial and parallel transfers
- We pass them directly to the scratchpad memory of the DPU
  - Working RAM (WRAM): 64KB per DPU
- This is useful for input parameters and some results

```
// In DPU WRAM (dpu/task.c)
__host dpu_arguments_t DPU_INPUT_ARGUMENTS;
__host dpu_results_t DPU_RESULTS[NR_TASKLETS];
```

```
// Host code (host/app.c)
#ifdef SERIAL
        DPU_FOREACH (dpu_set, dpu) {
            DPU_ASSERT(dpu_copy_to(dpu, "DPU_INPUT_ARGUMENTS", 0, (const void *)&input_arguments[i], sizeof(input_arguments[0])));
            i++;
        }
#else
        DPU_FOREACH(dpu_set, dpu, i) {
            DPU_ASSERT(dpu_prepare_xfer(dpu, &input_arguments[i]));
        }
        DPU_ASSERT(dpu_push_xfer(dpu_set, DPU_XFER_TO_DPU, "DPU_INPUT_ARGUMENTS", 0, sizeof(input_arguments[0]), DPU_XFER_DEFAULT));
#endif
```

Recall: Vector Addition (VA)

- Our first programming example
- We partition the input arrays across:
  - DPUs
  - Tasklets, i.e., software threads running on a DPU

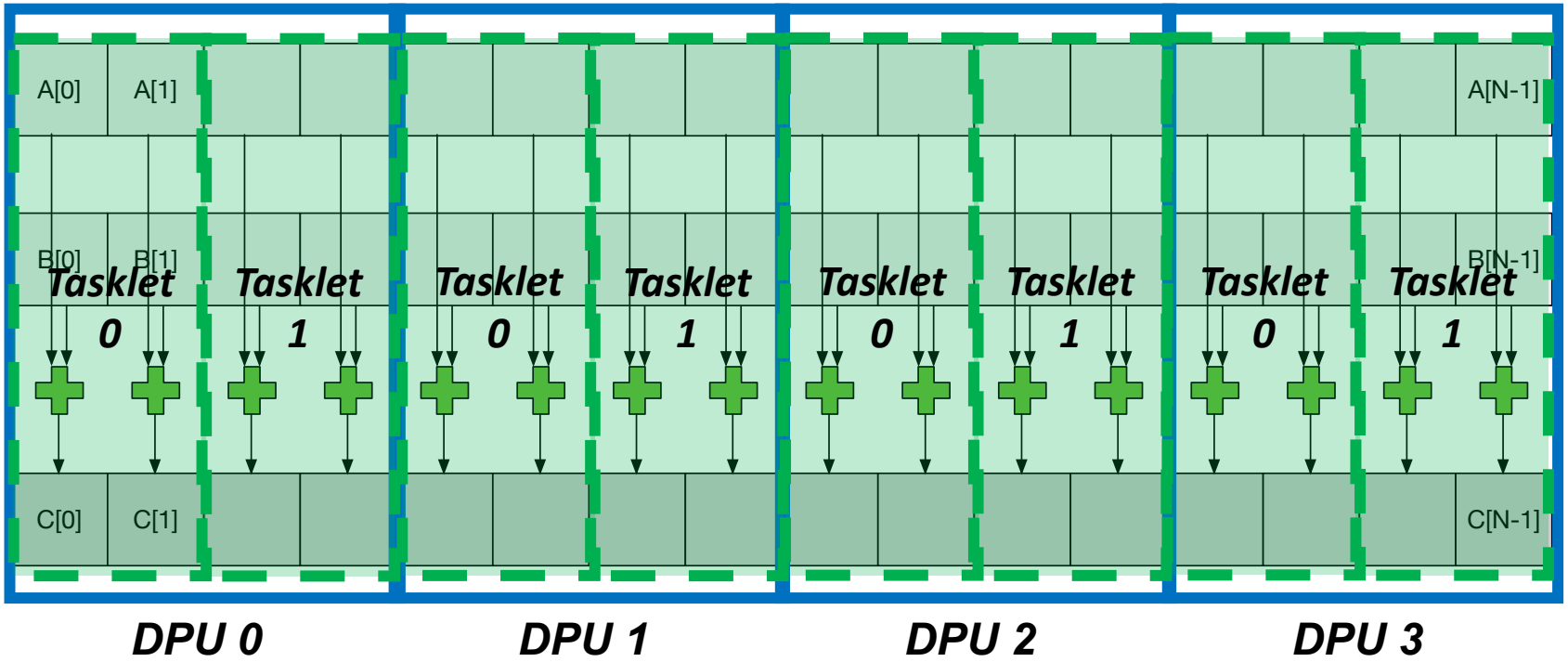

Programming a DPU Kernel (I)

- Vector addition

```
// Vector addition kernel
int main_kernel1() {
    unsigned int tasklet_id = me()
    uint32_t input_size_dpu_bytes = DPU_INPUT_ARGUMENTS.size; // Input size per DPU in bytes
    uint32_t input_size_dpu_bytes_transfer = DPU_INPUT_ARGUMENTS.transfer_size; // Transfer input size per DPU in bytes

    // Address of the current processing block in MRAM
    uint32_t base_tasklet = tasklet_id << BLOCK_SIZE_LOG2;
    uint32_t mram_base_addr_A = (uint32_t)DPU_MRAM_HEAP_POINTER;
    uint32_t mram_base_addr_B = (uint32_t)(DPU_MRAM_HEAP_POINTER + input_size_dpu_bytes_transfer);

    // Initialize a local cache to store the MRAM block
    T *cache_A = (T *) mem_alloc(BLOCK_SIZE);
    T *cache_B = (T *) mem_alloc(BLOCK_SIZE);

    for(unsigned int byte_index = base_tasklet; byte_index < input_size_dpu_bytes; byte_index += BLOCK_SIZE * NR_TASKLETS){
        // Bound checking
        uint32_t l_size_bytes = (byte_index + BLOCK_SIZE >= input_size_dpu_bytes) ? (input_size_dpu_bytes - byte_index) : BLOCK_SIZE;

        // Load cache with current MRAM block
        mram_read((__mram_ptr void const*)(mram_base_addr_A + byte_index), cache_A, l_size_bytes);
        mram_read((__mram_ptr void const*)(mram_base_addr_B + byte_index), cache_B, l_size_bytes);

        // Computer vector addition
        vector_addition(cache_B, cache_A, l_size_bytes >> DIV);

        // Write cache to current MRAM block
        mram_write(cache_B, (__mram_ptr void*)(mram_base_addr_B + byte_index), l_size_bytes);

    }
    return 0;
}
```

Tasklet ID

Size of vector tile processed by a DPU

MRAM addresses of arrays A and B

WRAM allocation

MRAM-WRAM DMA transfers

Vector addition (see next slide)

WRAM-MRAM DMA transfer

Programming a DPU Kernel (II)

- Vector addition

```
// vector_addition: Computes the vector addition of a cached block
static void vector_addition(T *bufferB, T *bufferA, unsigned int l_size) {

    for (unsigned int i = 0; i < l_size; i++){
        bufferB[i] += bufferA[i];
    }

}
```

Intra-DPU Synchronization

Synchronization Primitives

- A tasklet is the software abstraction of a hardware thread
- Each tasklet can have its own memory space in WRAM
  - Tasklets can also share data in WRAM by sharing pointers
- Tasklets within the same DPU can synchronize
  - Mutual exclusion
    - `mutex_lock(); mutex_unlock();`
  - Handshakes
    - `handshake_wait_for(); handshake_notify();`
  - Barriers
    - `barrier_wait();`
  - Semaphores
    - `sem_give(); sem_take();`

Parallel Reduction (I)

- Tasklets in a DPU can work together on a parallel reduction

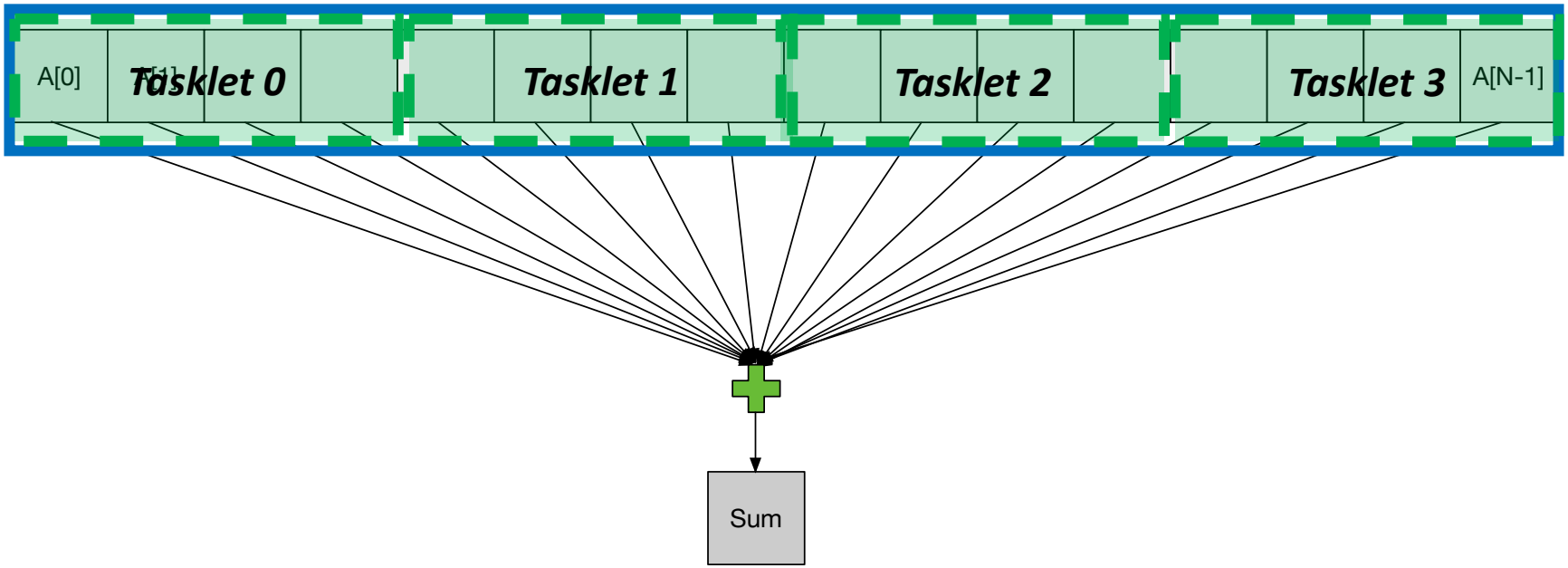

Parallel Reduction (II)

- Each tasklet computes a local sum

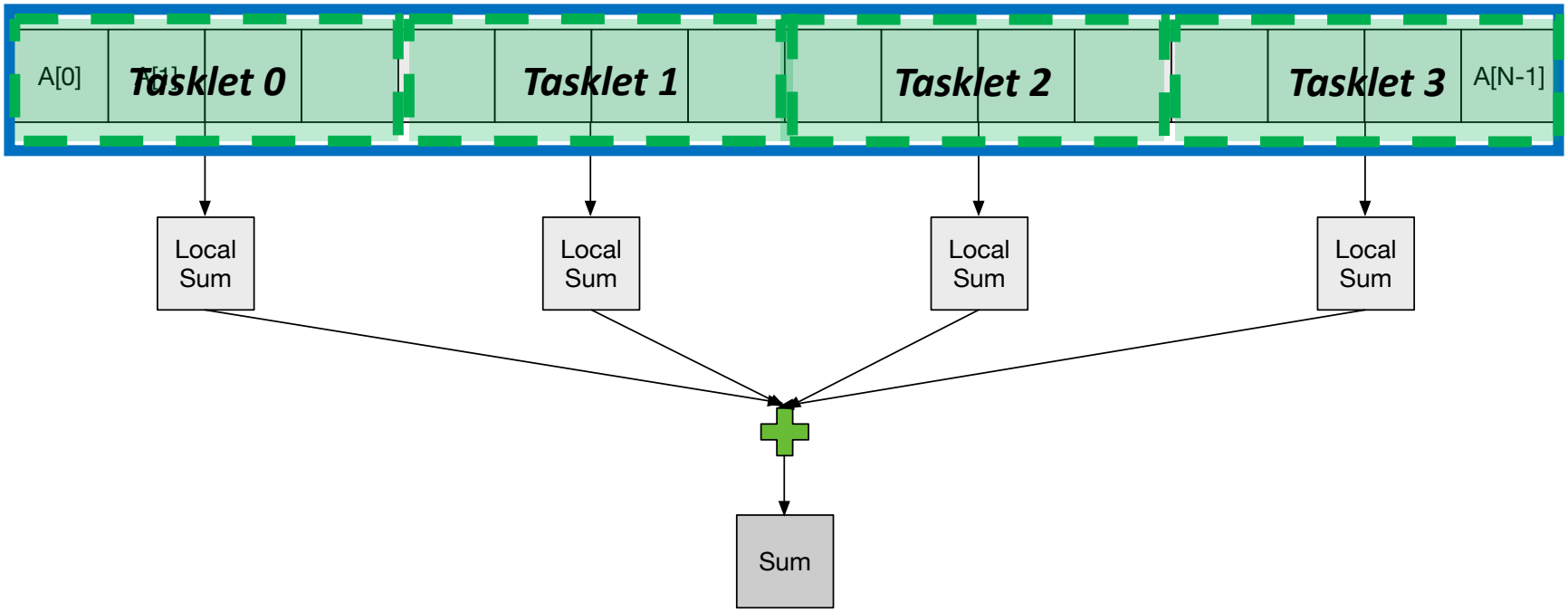

Parallel Reduction (III)

- Each tasklet computes a local sum

```
for(unsigned int byte_index = base_tasklet; byte_index < input_size_dpu_bytes; byte_index += BLOCK_SIZE * NR_TASKLETS){

    // Bound checking
    uint32_t l_size_bytes = (byte_index + BLOCK_SIZE >= input_size_dpu_bytes) ? (input_size_dpu_bytes - byte_index) : BLOCK_SIZE;

    // Load cache with current MRAM block
    mram_read((__mram_ptr void const*)(mram_base_addr_A + byte_index), cache_A, l_size_bytes);

    // Reduction in each tasklet
    l_count += reduction(cache_A, l_size_bytes >> DIV);

}
// Copy local count to shared array in WRAM
message[tasklet_id] = l_count;
```

Accumulate in a local sum

Copy local sum into WRAM

Final Reduction

- A single tasklet can perform the final reduction

```
for(unsigned int byte_index = base_tasklet; byte_index < input_size_dpu_bytes; byte_index += BLOCK_SIZE * NR_TASKLETS){

    // Bound checking
    uint32_t l_size_bytes = (byte_index + BLOCK_SIZE >= input_size_dpu_bytes) ? (input_size_dpu_bytes - byte_index) : BLOCK_SIZE;

    // Load cache with current MRAM block
    mram_read((__mram_ptr void const*)(mram_base_addr_A + byte_index), cache_A, l_size_bytes);

    // Reduction in each tasklet
    l_count += reduction(cache_A, l_size_bytes >> DIV);

}
// Copy local count to shared array in WRAM
message[tasklet_id] = l_count;
```

Accumulate in a local sum

Copy local sum into WRAM

```
// Single-thread reduction
// Barrier
barrier_wait(&my_barrier);

if(tasklet_id == 0){
    #pragma unroll
    for (unsigned int each_tasklet = 1; each_tasklet < NR_TASKLETS; each_tasklet++){
        message[0] += message[each_tasklet];
    }

    // Total count in this DPU
    result->t_count = message[0];
}
```

Barrier synchronization

Sequential accumulation

Vector Reduction: Naïve Mapping

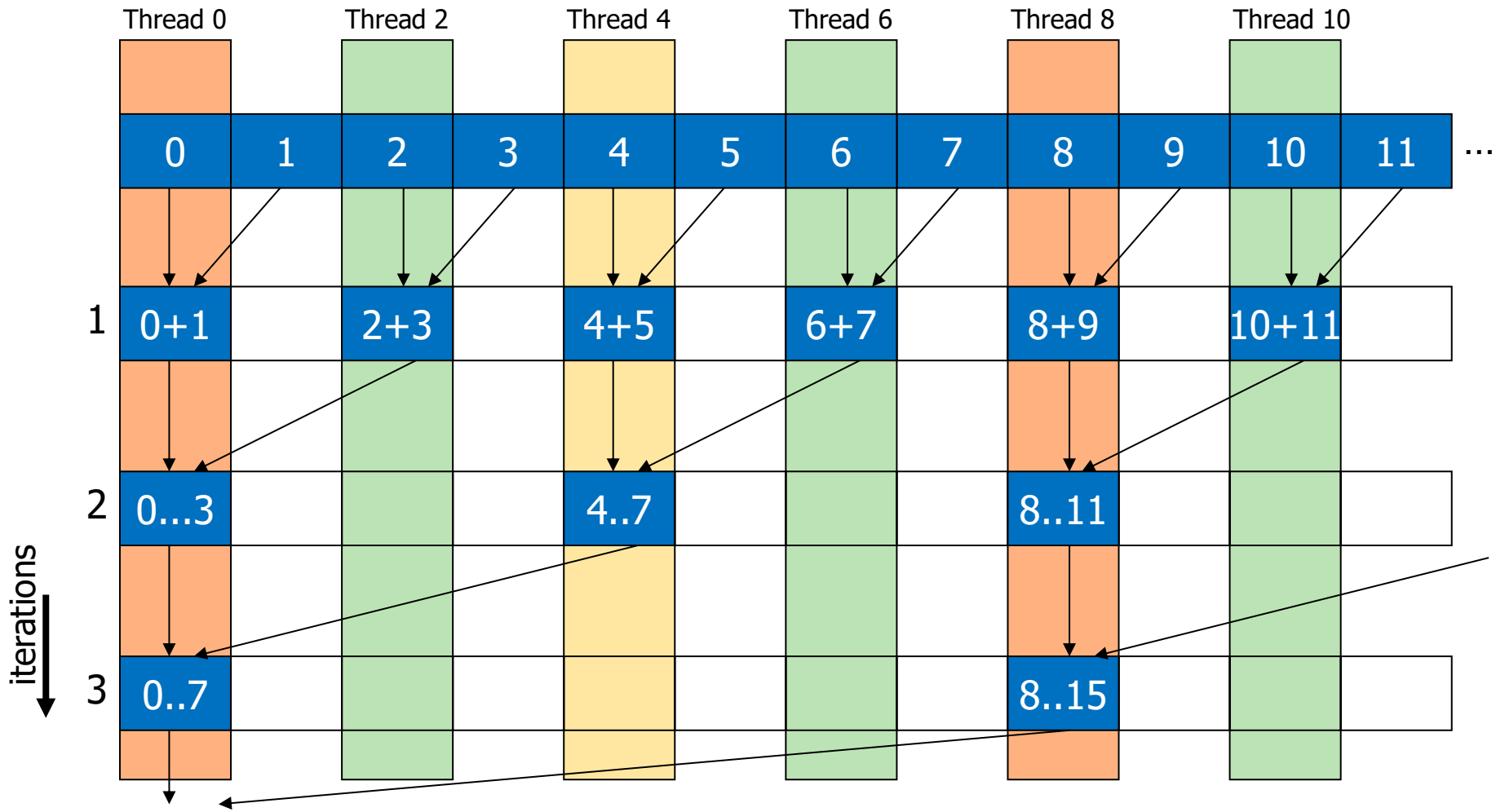

Slide credit: Hwu & Kirk

Using Barriers: Tree-Based Reduction

- Multiple tasklets can perform a tree-based reduction
  - After every iteration tasklets synchronize with a barrier
  - Half of the tasklets retire at the end of an iteration

```
// Barrier
barrier_wait(&my_barrier);

#pragma unroll
for (unsigned int offset = 1; offset < NR_TASKLETS; offset <<= 1){

    if((tasklet_id & (2*offset - 1)) == 0){
        message[tasklet_id] += message[tasklet_id + offset];
    }

    // Barrier
    barrier_wait(&my_barrier);
}
```

"offset" tasklets working

Barrier synchronization

A handshake-based tree-based reduction is also possible.
We can compare single-tasklet, barrier-based,
and handshake-based versions*

*Gómez-Luna et al., "Benchmarking a New Paradigm: An Experimental Analysis of a Real Processing-in-Memory Architecture," https://arxiv.org/pdf/2105.03814.pdf

Parallel Reduction on GPU

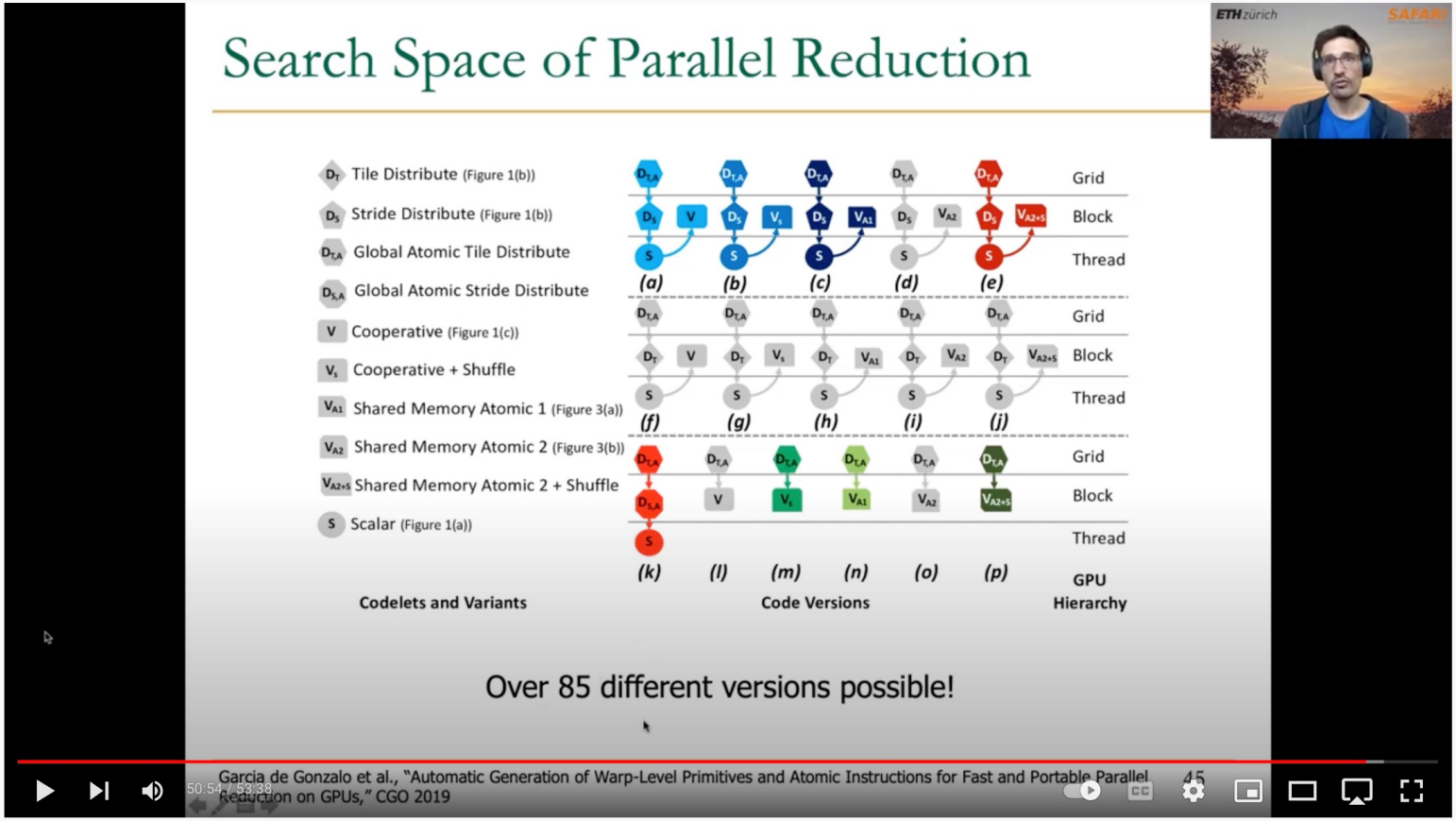

HetSys Course: Lecture 6: Parallel Patterns: Reduction (Spring 2022)

201 views • Premiered Apr 19, 2022

15 DISLIKE SHARE CLIP SAVE ...

Onur Mutlu Lectures
24.1K subscribers

SUBSCRIBED

Project & Seminar, ETH Zürich, Spring 2022
Hands-on Acceleration on Heterogeneous Computing Systems (
https://safari.ethz.ch/projects_and_s...)

https://youtu.be/Xp0HHpcDwUc

UPMEM SDK Documentation

up mem

2023.1.0

Search docs

GETTING STARTED

The UPMEM DPU toolchain

Installing the UPMEM DPU toolchain

Hello World! Example

PROGRAMMING

Introduction

Tasklet management and synchronization

Memory management

Standard library functions

Exceptions

Controlling the execution of DPUs from host applications

Communication with host applications

Advanced Features of the Host API

Logging

/ User Manual

User Manual

Getting started

- The UPMEM DPU toolchain
  - Notes before starting
  - The toolchain purpose
  - dpu-upmem-dpurte-clang
    - Limitations
  - The DPU Runtime Library
  - The Host Library
  - dpu-lldb
- Installing the UPMEM DPU toolchain
  - Dependencies
    - Python
  - Installation packages
    - Installation from tar.gz binary archive
  - Functional simulator
- Hello World! Example
  - Purpose
  - Writing and building the program

Microbenchmarking of UPMEM PIM

DPU Pipeline

- In-order pipeline
  - Up to 425 MHz
- Fine-grain multithreaded
  - 24 hardware threads
- 14 pipeline stages
  - DISPATCH: Thread selection
  - FETCH: Instruction fetch
  - READOP: Register file
  - FORMAT: Operand formatting
  - ALU: Operation and WRAM
  - MERGE: Result formatting

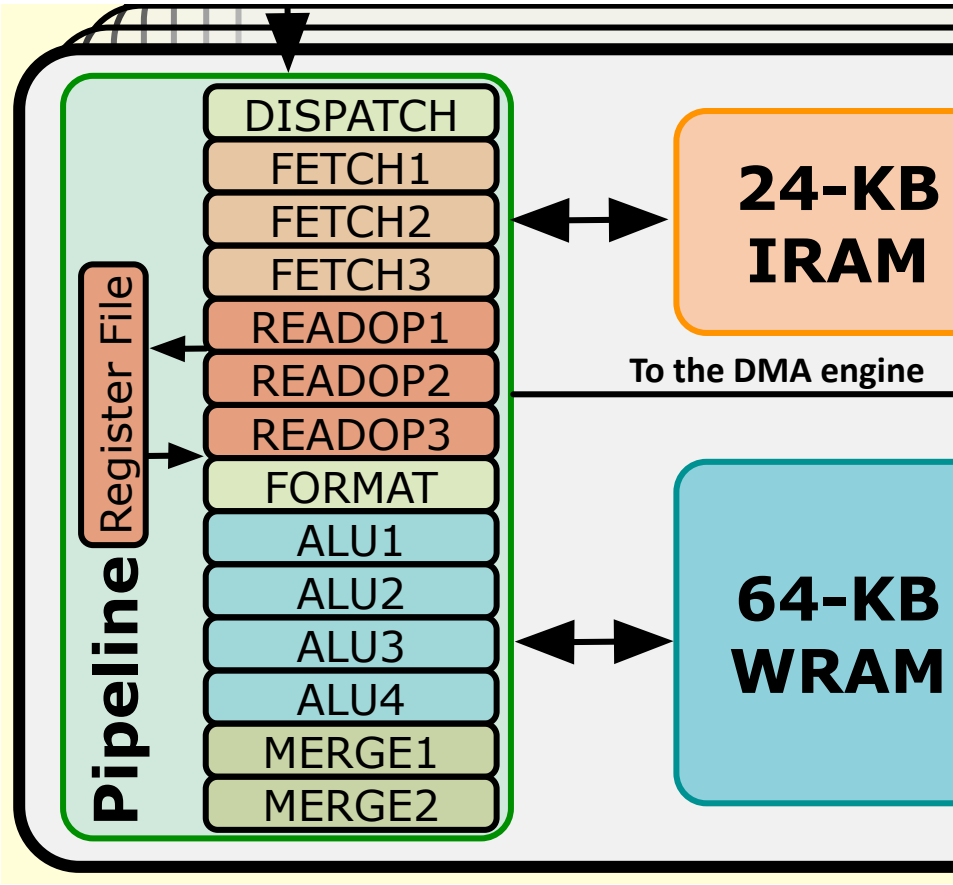

Arithmetic Throughput: Microbenchmark

- Goal
  - Measure the maximum arithmetic throughput for different datatypes and operations

- Microbenchmark
  - We stream over an array in WRAM and perform read-modify-write operations
  - Experiments on one DPU
  - We vary the number of tasklets from 1 to 24
  - Arithmetic operations: add, subtract, multiply, divide
  - Datatypes: int32, int64, float, double

- We measure cycles with an accurate cycle counter that the SDK provides
  - We include WRAM accesses (including address calculation) and arithmetic operation

Microbenchmark for INT32 ADD Throughput

C-based code

```
#define SIZE 256
int* bufferA = mem_alloc(SIZE * sizeof(int));
for(int i = 0; i < SIZE; i++){
    int temp = bufferA[i];
    temp += scalar;
    bufferA[i] = temp;
}
```

Compiled code (UPMEM DPU ISA)

```
 move r2, 0
.LBB0_1:                    // Loop header
 lsl_add r3, r0, r2, 2      // Address calculation
 lw r4, r3, 0               // Load from WRAM
 add r4, r4, r1             // Add
 sw r3, 0, r4               // Store to WRAM
 add r2, r2, 1              // Index update
 jneq r2, 256, .LBB0_1      // Conditional jump
```

Arithmetic Throughput: 11 Tasklets

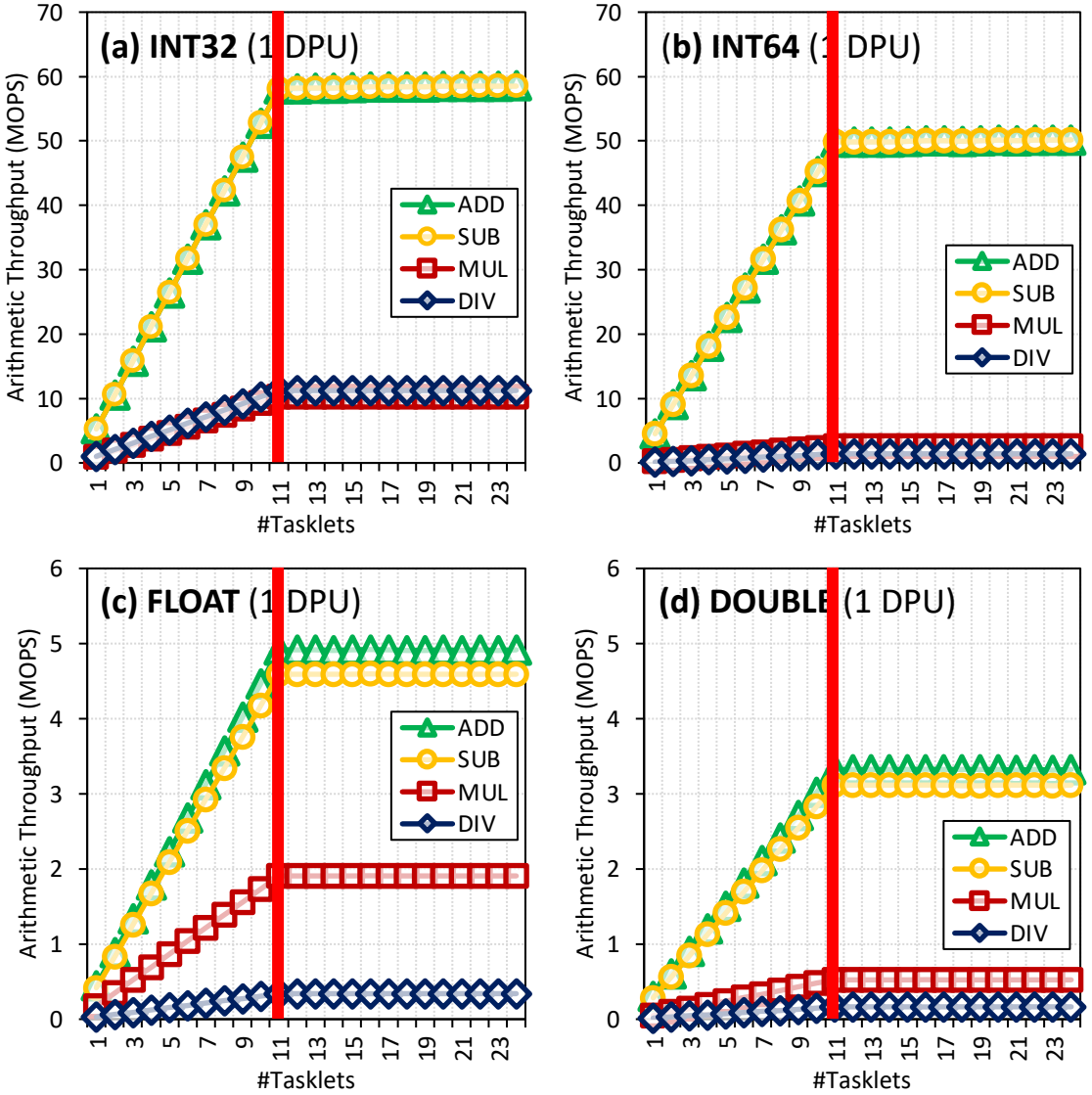

KEY OBSERVATION 1

The arithmetic throughput of a DRAM Processing Unit saturates at 11 or more tasklets.

This observation is consistent for different datatypes (INT32, INT64, UINT32, UINT64, FLOAT, DOUBLE) and operations (ADD, SUB, MUL, DIV).

Arithmetic Throughput: ADD/SUB

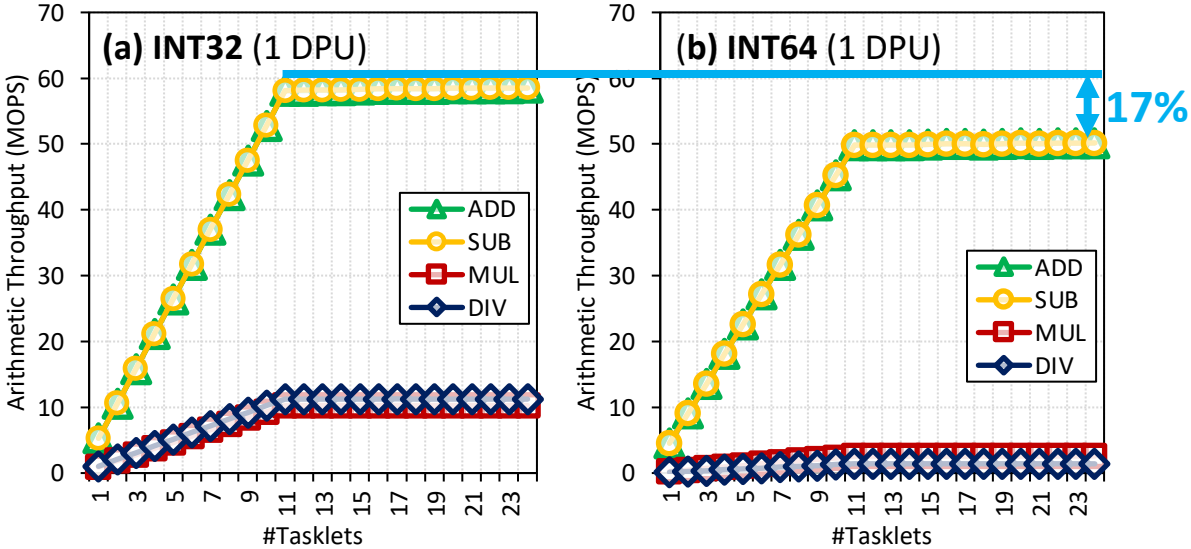

INT32 ADD/SUB are 17% faster than INT64 ADD/SUB

Can we explain the peak throughput?

Peak throughput at 11 tasklets.

One instruction retires every cycle when the pipeline is full

$$Arithmetic\ Throughput\ (in\ OPS) = \frac{frequency_{DPU}}{\#instructions}$$

Arithmetic Throughput: #Instructions

- Compiler explorer: https://dpu.dev

```c
#define BLOCK_SIZE 1024

typedef int T;
void Benchmark__32bits(T *cache_A, T scalar) {
    for (int i = 0; i < BLOCK_SIZE / sizeof(T); i++){
        ////// WRAM READ //////
        T temp = cache_A[i];

        temp += scalar; // ADD

        ////// WRAM WRITE //////
        cache_A[i] = temp;
    }
}

typedef long T_long;
void Benchmark__64bits(T_long *cache_A, T_long scalar) {
    for (int i = 0; i < BLOCK_SIZE / sizeof(T_long); i++){
        ////// WRAM READ //////
        T_long temp = cache_A[i];

        temp += scalar; // ADD
```

A ▾ ☐ 11010 ☐ ./a.out ☑ .LX0: ☑ .text ☑ //

```
Benchmark__32bits:
        move r2, 0
.LBB0_1:
        lsl_add r3, r0, r2, 2
        lw r4, r3, 0
        add r4, r4, r1
        sw r3, 0, r4
        add r2, r2, 1
        jneq r2, 256, .LBB0_1
        jump r23
Benchmark__64bits:
        move r1, 0
.LBB1_1:
        lsl_add r4, r0, r1, 3
        ld d6, r4, 0
        add r7, r7, r3
        addc r6, r6, r2
        sd r4, 0, d6
        add r1, r1, 1
        jneq r1, 128, .LBB1_1
        jump r23
```

6 instructions in the 32-bit ADD/SUB microbenchmark
7 instructions in the 64-bit ADD/SUB microbenchmark

Arithmetic Throughput: ADD/SUB

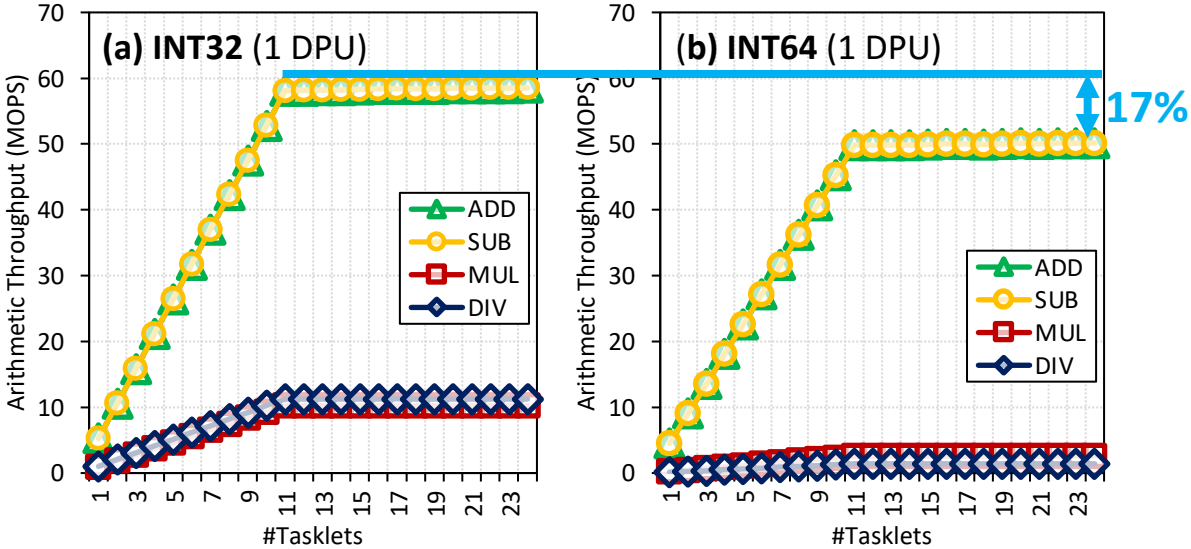

INT32 ADD/SUB are 17% faster than INT64 ADD/SUB

Can we explain the peak throughput?

Peak throughput at 11 tasklets.
One instruction retires every cycle when the pipeline is full

$$Arithmetic\ Throughput\ (in\ OPS) = \frac{frequency_{DPU}}{\#instructions}$$

64-bit ADD/SUB: 7 instructions → 50.00 MOPS
at $frequency_{DPU}$ = 350 MHz

Arithmetic Throughput: MUL/DIV

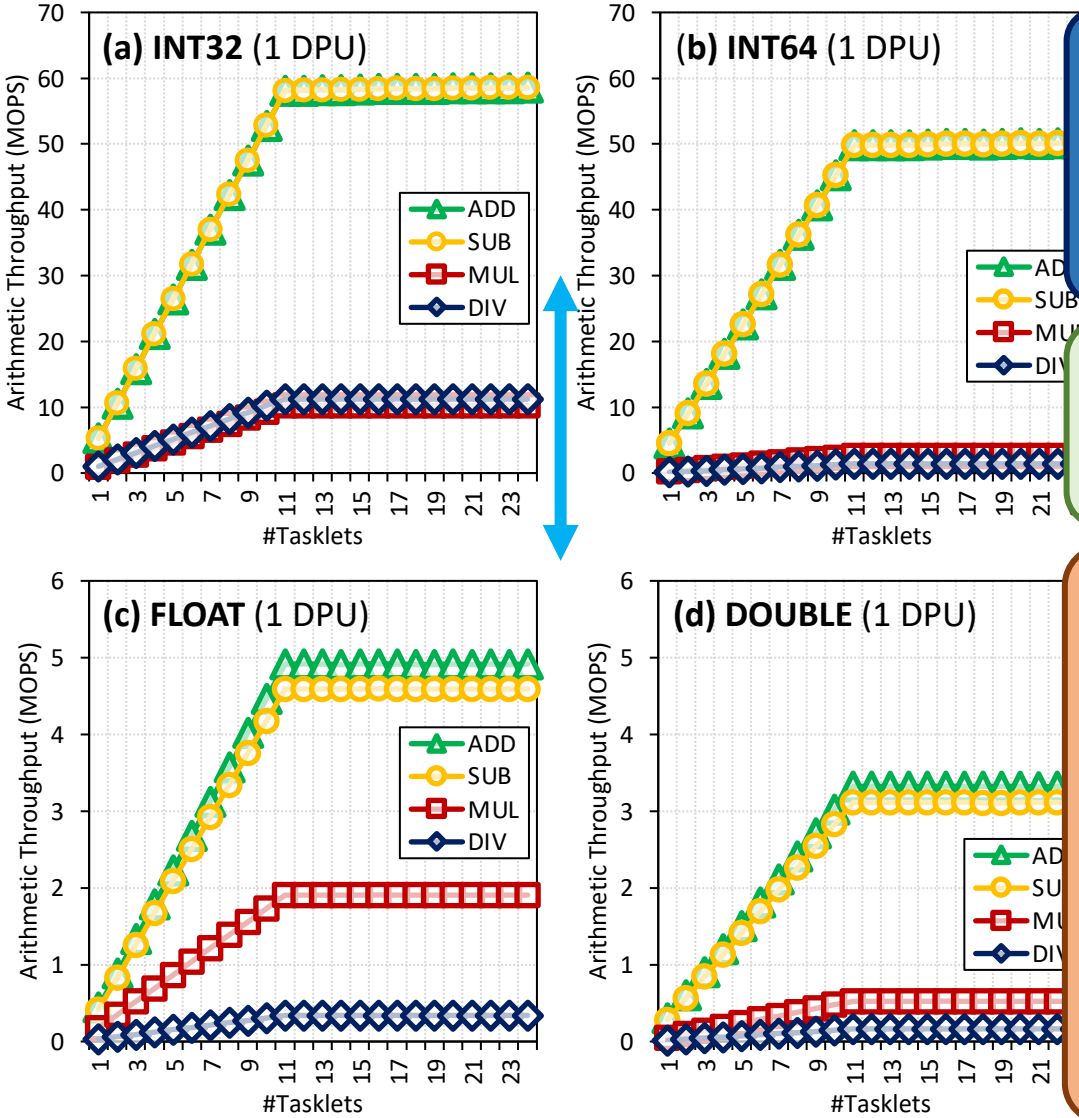

Huge throughput difference between ADD/SUB and MUL/DIV

DPUs do *not* have a 32-bit multiplier

MUL/DIV implementation is based on an instruction that performs bit shifting and addition in 1 cycle (MUL/DIV take a maximum of 32 instructions)

Arithmetic Throughput: Native Support

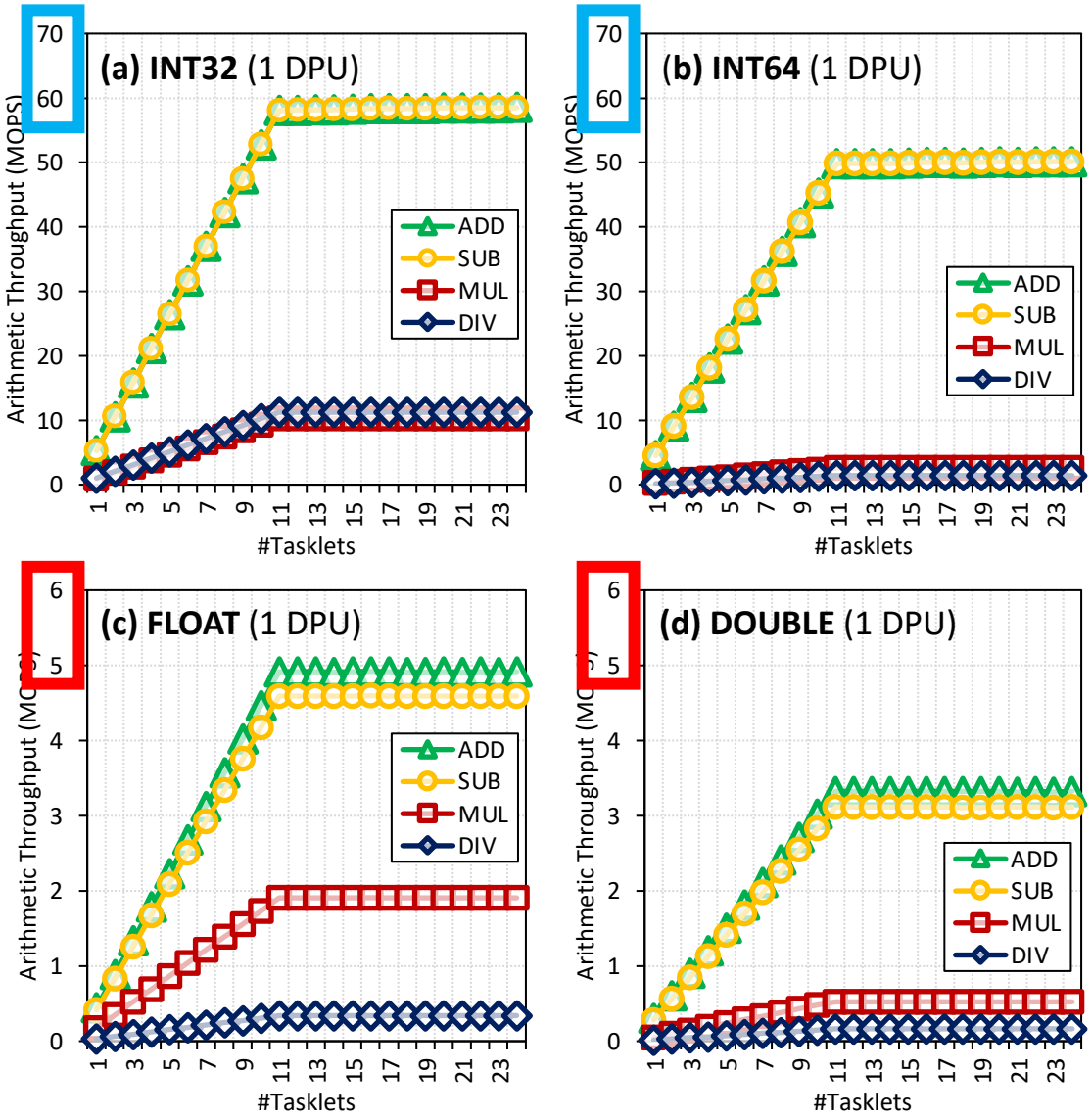

KEY OBSERVATION 2

- DPUs provide **native hardware support for 32- and 64-bit integer addition and subtraction**, leading to high throughput for these operations.
- DPUs do ***not*** **natively support 32- and 64-bit multiplication and division, and floating point operations**. These operations are **emulated by the UPMEM runtime library**, leading to much lower throughput.

Microbenchmark: Arithmetic Throughput

- Arithmetic throughput for different operations and datatypes

CMU-SAFARI / prim-benchmarks

Unwatch 2 | Star 2 | Fork 1

Code | Issues | Pull requests | Actions | Projects | Wiki | Security | Insights | Settings

main | prim-benchmarks / Microbenchmarks / Arithmetic-Throughput / | Go to file | Add file | ...

Juan Gomez Luna PrIM -- first commit 3de4b49 9 days ago History

..		
dpu	PrIM -- first commit	9 days ago
host	PrIM -- first commit	9 days ago
support	PrIM -- first commit	9 days ago
Makefile	PrIM -- first commit	9 days ago
run.sh	PrIM -- first commit	9 days ago

DPU: WRAM Bandwidth

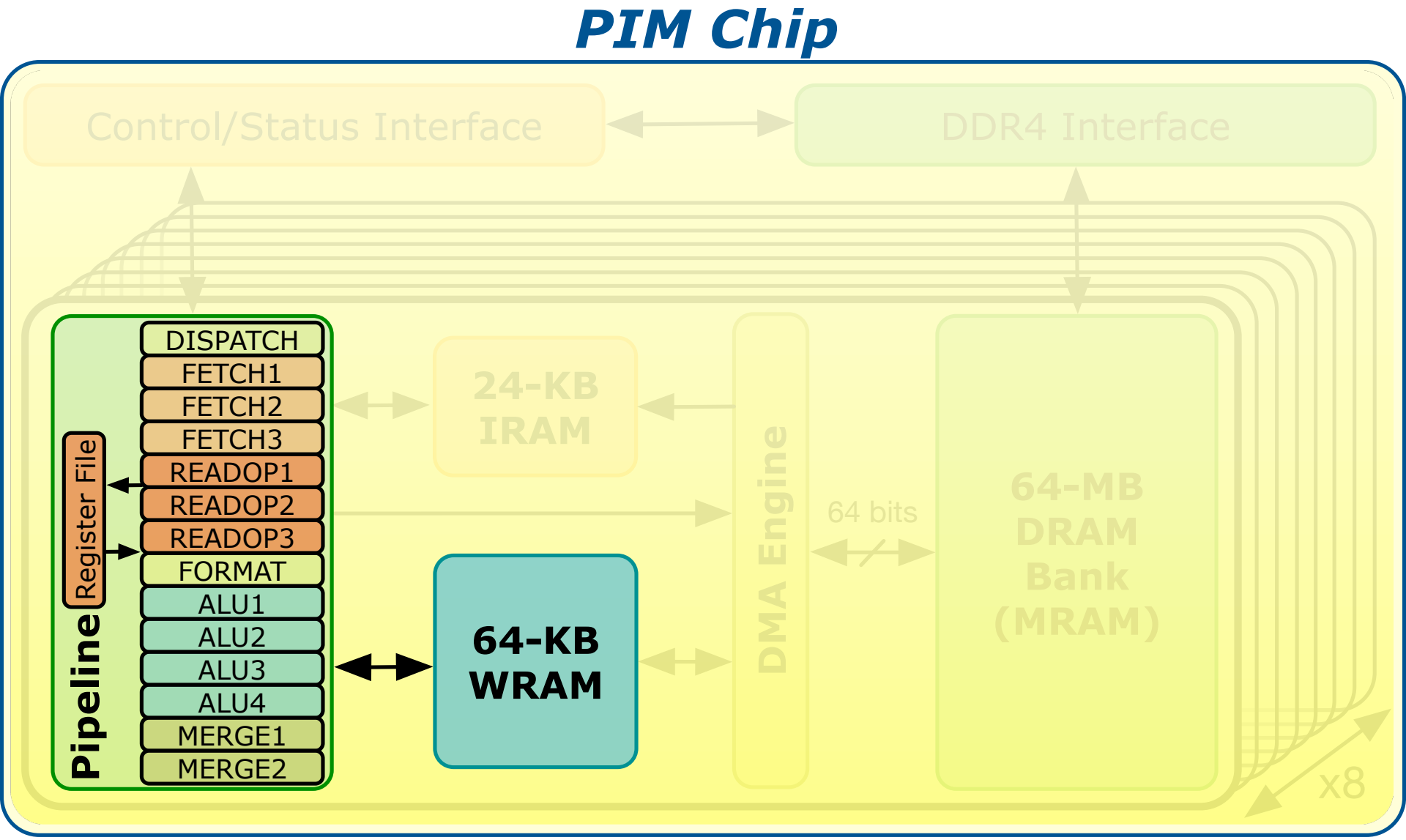

WRAM Bandwidth: Microbenchmark

- Goal
  - Measure the WRAM bandwidth for the STREAM benchmark

- Microbenchmark
  - We implement the four versions of STREAM: COPY, ADD, SCALE, and TRIAD
  - The operations performed in ADD, SCALE, and TRIAD are addition, multiplication, and addition+multiplication, respectively
  - We vary the number of tasklets from 1 to 16
  - We show results for 1 DPU

- We do *not* include accesses to MRAM

STREAM Benchmark in WRAM

```
// COPY
for(int i = 0; i < SIZE; i++){
    bufferB[i] = bufferA[i];
}
```

8 bytes read, 8 bytes written, no arithmetic operations

```
// ADD
for(int i = 0; i < SIZE; i++){
    bufferC[i] = bufferA[i] + bufferB[i];
}
```

16 bytes read, 8 bytes written, ADD

```
// SCALE
for(int i = 0; i < SIZE; i++){
    bufferB[i] = scalar * bufferA[i];
}
```

8 bytes read, 8 bytes written, MUL

```
// TRIAD
for(int i = 0; i < SIZE; i++){
    bufferC[i] = bufferA[i] + scalar * bufferB[i];
}
```

16 bytes read, 8 bytes written, MUL, ADD

WRAM Bandwidth: STREAM

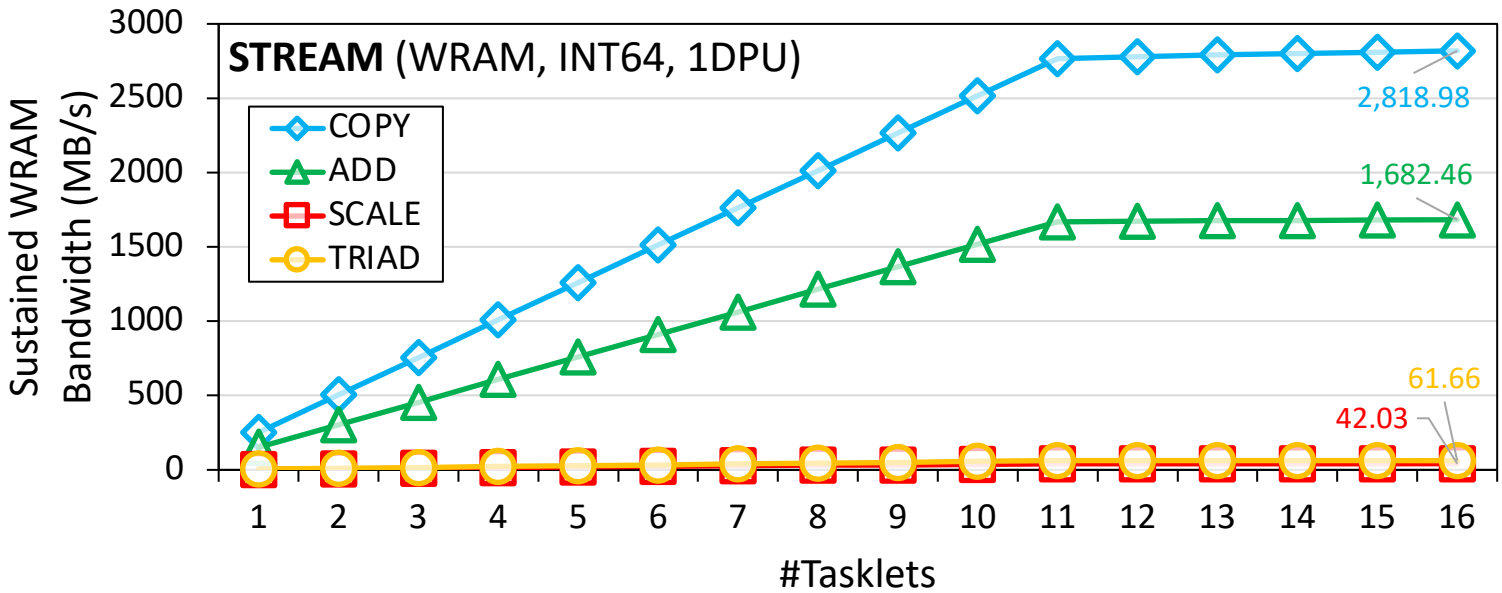

How can we estimate the bandwidth?

Assuming that the pipeline is full, and *Bytes* is the number of bytes read and written:

$$WRAM\ Bandwidth\ \left(in\ \frac{B}{S}\right) = \frac{Bytes \times frequency_{DPU}}{\#instructions}$$

WRAM Bandwidth: COPY

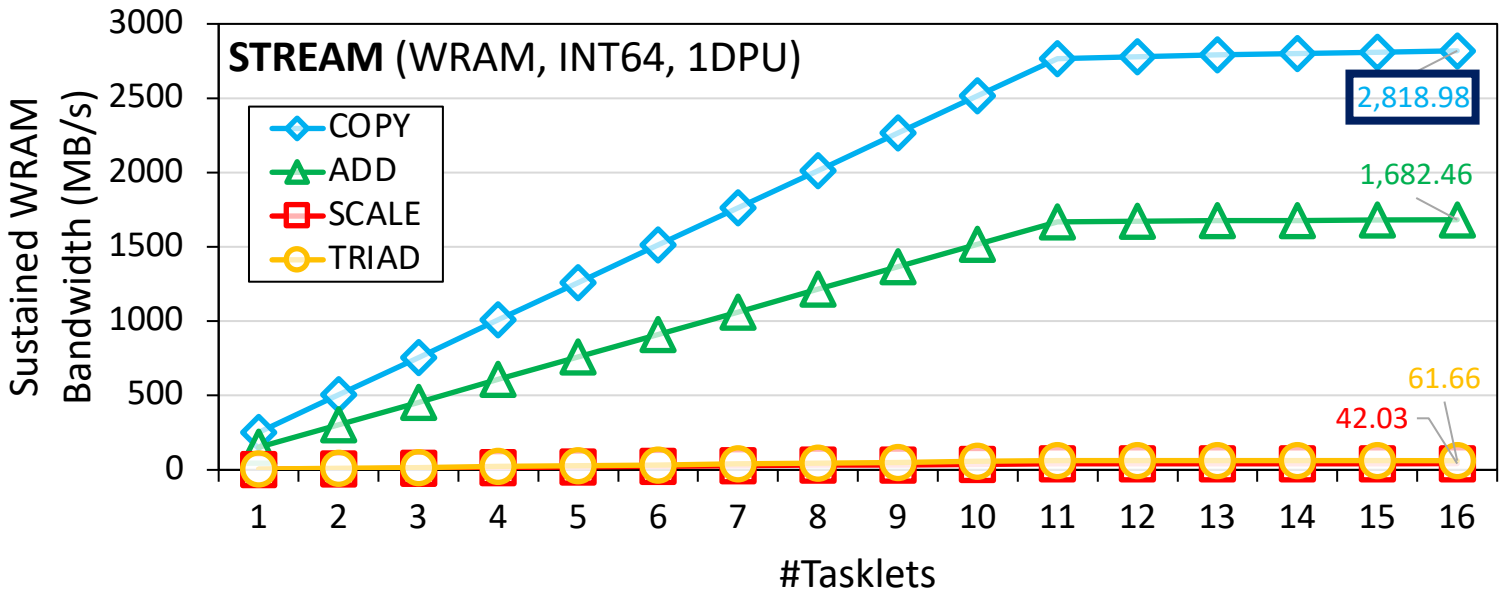

COPY executes 2 instructions (WRAM load and store).
With 11 tasklets, 11 × 16 bytes in 22 cycles:

$$WRAM\ Bandwidth\ \left(in\frac{B}{S}\right) = 2{,}800\frac{MB}{s}\ at\ 350\ MHz$$

WRAM Bandwidth: ADD

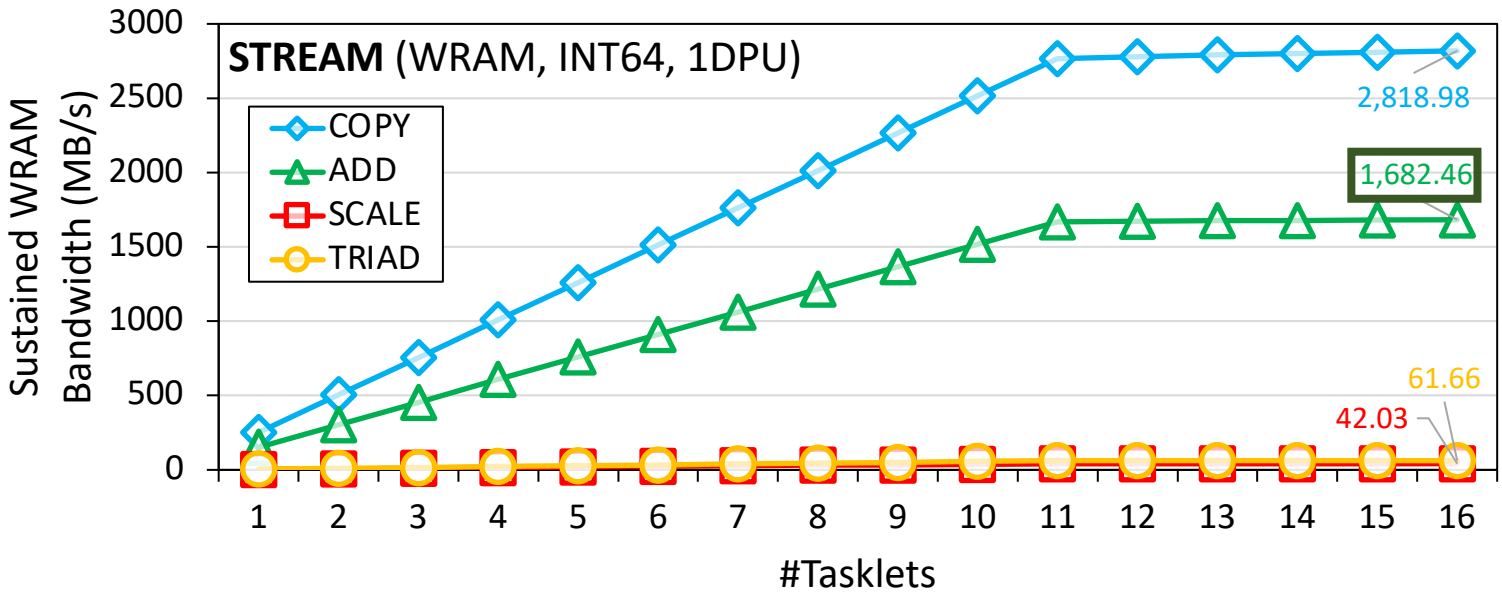

$$WRAM\ Bandwidth\ \left(in\ \frac{B}{S}\right) = \frac{Bytes \times frequency_{DPU}}{\#instructions}$$

ADD executes 5 instructions (2 `ld`, `add`, `addc`, `sd`).
With 11 tasklets, 11 × 24 bytes in 55 cycles:

$$WRAM\ Bandwidth\ \left(in\ \frac{B}{S}\right) = 1{,}680\ \frac{MB}{s}\ at\ 350\ MHz$$

WRAM Bandwidth: Access Patterns

- All 8-byte WRAM loads and stores take one cycle when the DPU pipeline is full

KEY OBSERVATION 3

The sustained bandwidth provided by the DPU's internal Working memory (WRAM) is **independent of the memory access pattern** (either streaming, strided, or random access pattern).

All 8-byte WRAM loads and stores take one cycle, when the DPU's pipeline is full (i.e., with 11 or more tasklets).

- Microbenchmark: `c[a[i]]=b[a[i]];`
  - Unit-stride: `a[i]=a[i-1]+1;`
  - Strided: `a[i]=a[i-1]+stride;`
  - Random: `a[i]=rand();`

Microbenchmark: STREAM and WRAM

- STREAM benchmark and WRAM access patterns

CMU-SAFARI / prim-benchmarks

Unwatch 2 | Star 2 | Fork 1

Code | Issues | Pull requests | Actions | Projects | Wiki | Security | Insights | Settings

main | prim-benchmarks / Microbenchmarks / STREAM / | Go to file | Add file | ···

main | prim-benchmarks / Microbenchmarks / WRAM / | Go to file | Add file | ···

Juan Gomez Luna PrIM -- first commit 3de4b49 9 days ago History

..		
dpu	PrIM -- first commit	9 days ago
host	PrIM -- first commit	9 days ago
support	PrIM -- first commit	9 days ago
Makefile	PrIM -- first commit	9 days ago
run.sh	PrIM -- first commit	9 days ago

DPU: MRAM Latency and Bandwidth

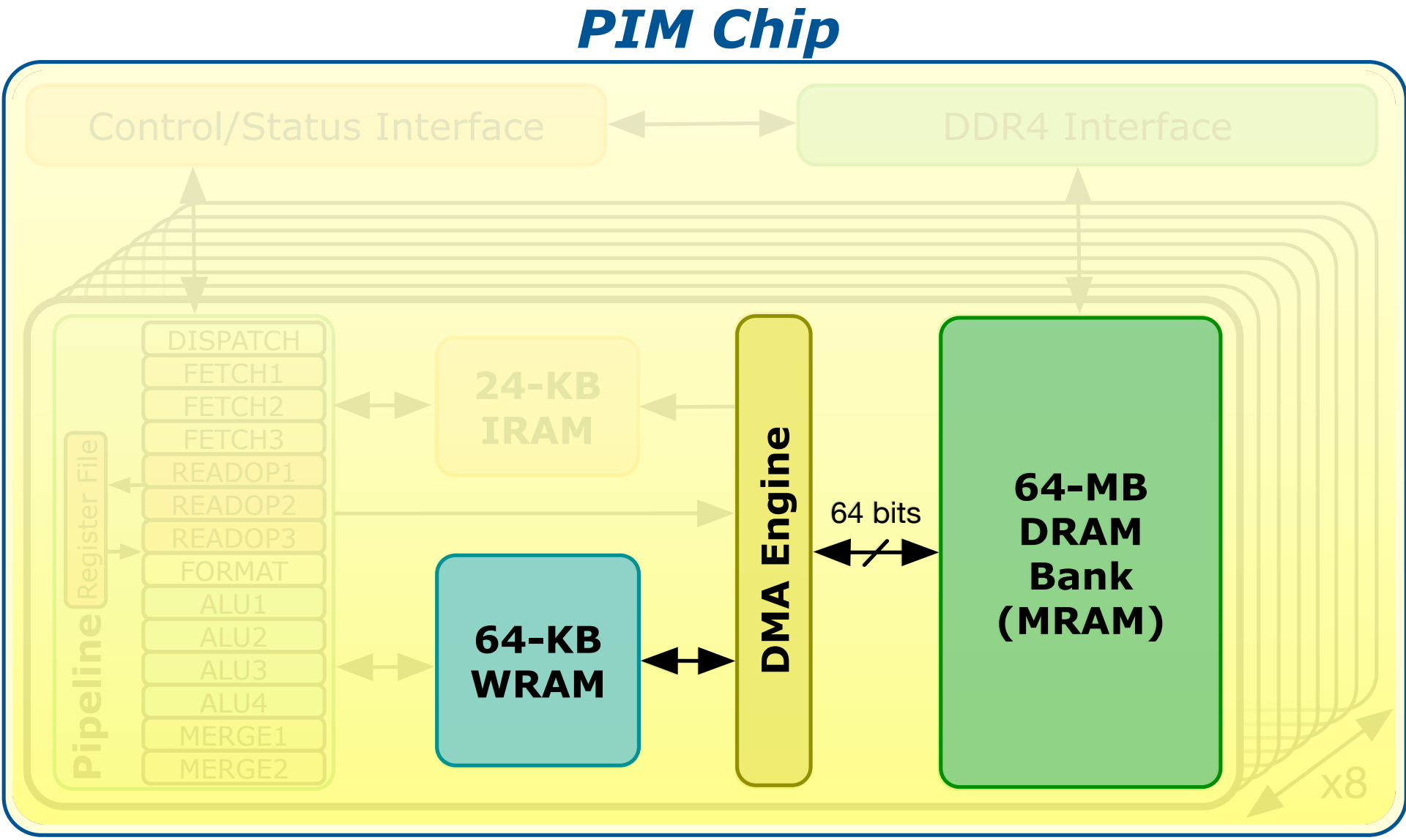

MRAM Bandwidth

- Goal
  - Measure MRAM bandwidth for different access patterns

- Microbenchmarks
  - Latency of a single DMA transfer for different transfer sizes
    - `mram_read();  // MRAM-WRAM DMA transfer`
    - `mram_write(); // WRAM-MRAM DMA transfer`
  - STREAM benchmark
    - COPY, COPY-DMA
    - ADD, SCALE, TRIAD
  - Strided access pattern
    - Coarse-grain strided access
    - Fine-grain strided access
  - Random access pattern (GUPS)

- We do include accesses to MRAM

MRAM Read and Write Latency (I)

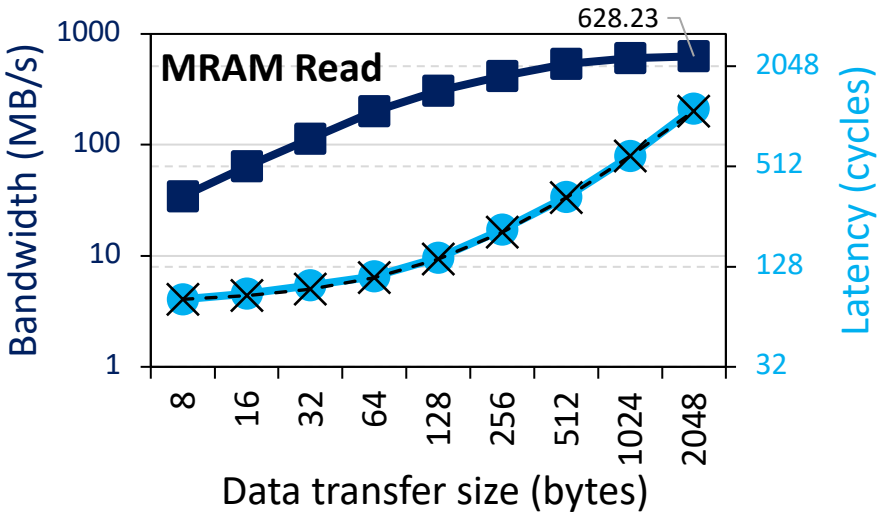

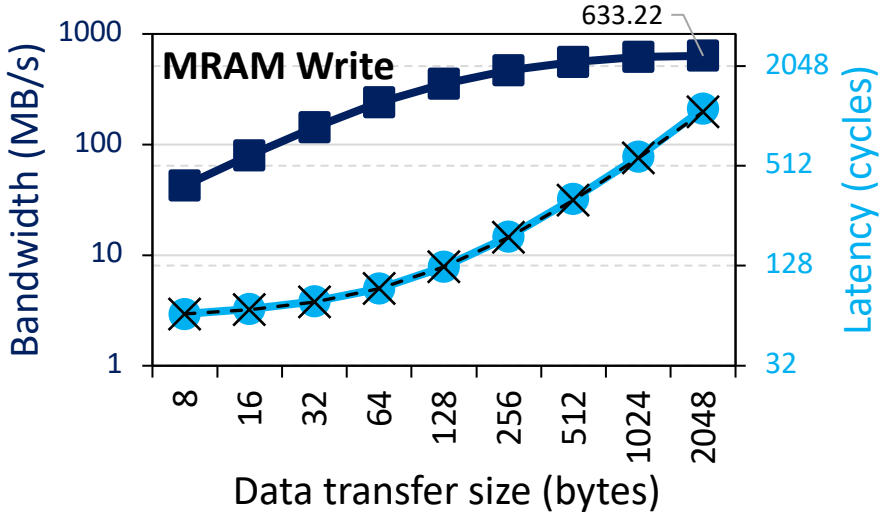

$$MRAM\ Bandwidth\ \left(in\ \frac{B}{S}\right) = \frac{size \times frequency_{DPU}}{MRAM\ Latency}$$

We can model the MRAM latency with a linear expression

$$MRAM\ Latency\ (in\ cycles) = \alpha + \beta \times size$$

In our measurements, β equals 0.5 cycles/byte.
Theoretical maximum MRAM bandwidth = 700 MB/s at 350 MHz

MRAM Read and Write Latency (II)

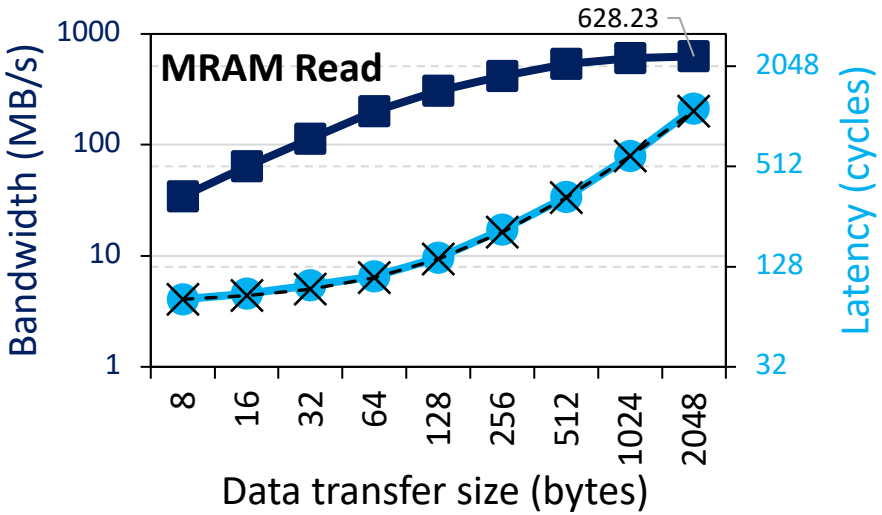

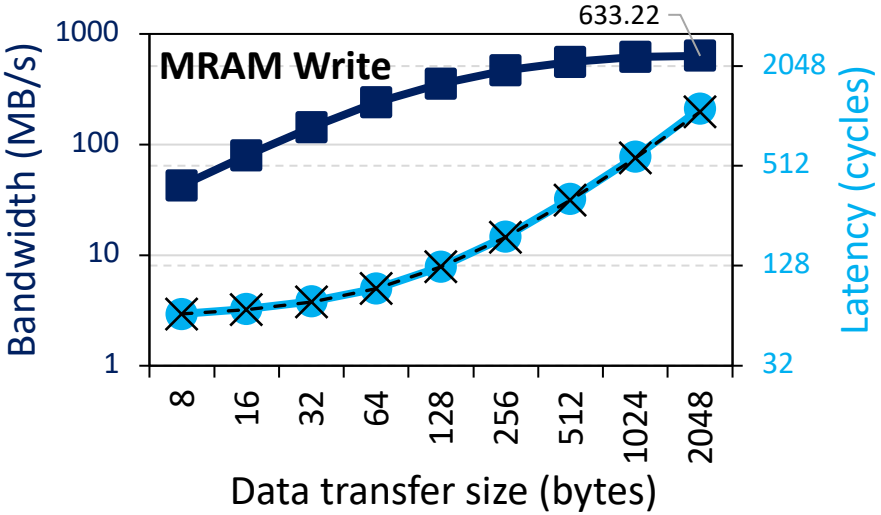

KEY OBSERVATION 4

- The DPU's **Main memory (MRAM) bank access latency increases linearly** with the transfer size.
- The maximum theoretical MRAM **bandwidth is 2 bytes per cycle**.

MRAM Read and Write Latency (III)

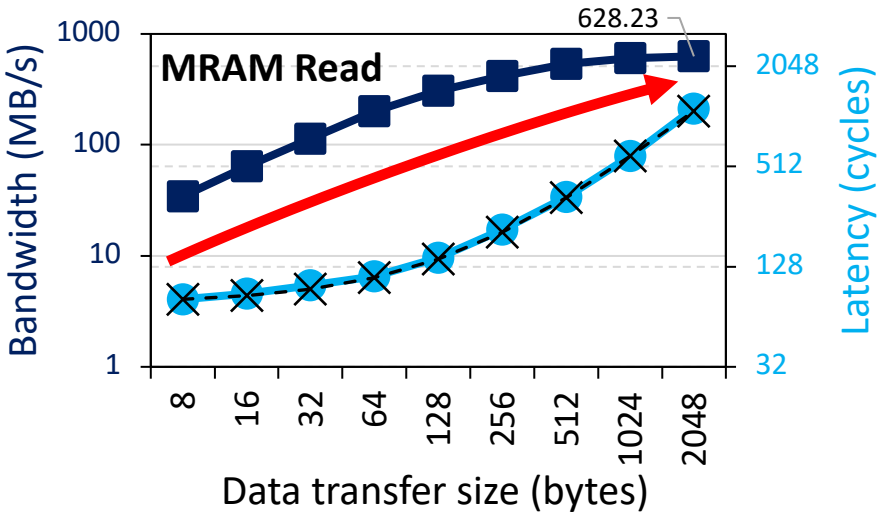

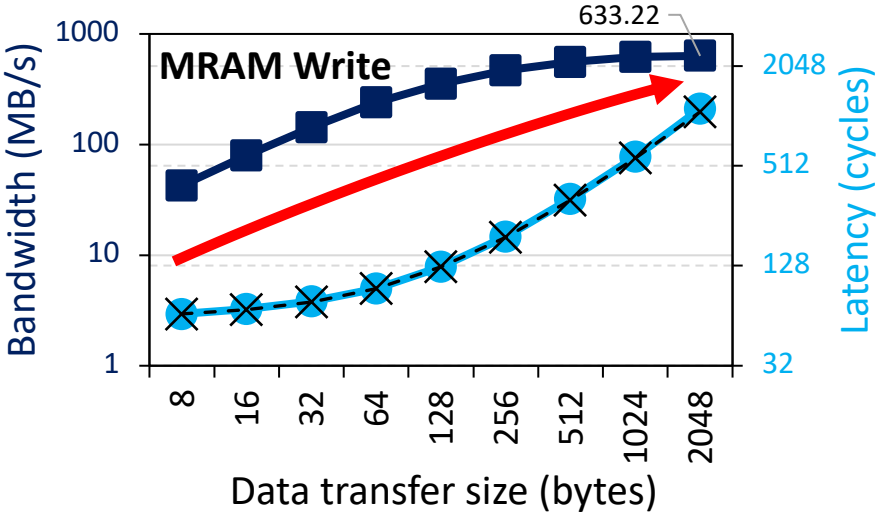

Read and write accesses to MRAM are symmetric

The sustained MRAM bandwidth increases with data transfer size

PROGRAMMING RECOMMENDATION 1

For data movement between the DPU's MRAM bank and the WRAM, **use large DMA transfer sizes when all the accessed data is going to be used.**

MRAM Read and Write Latency (IV)

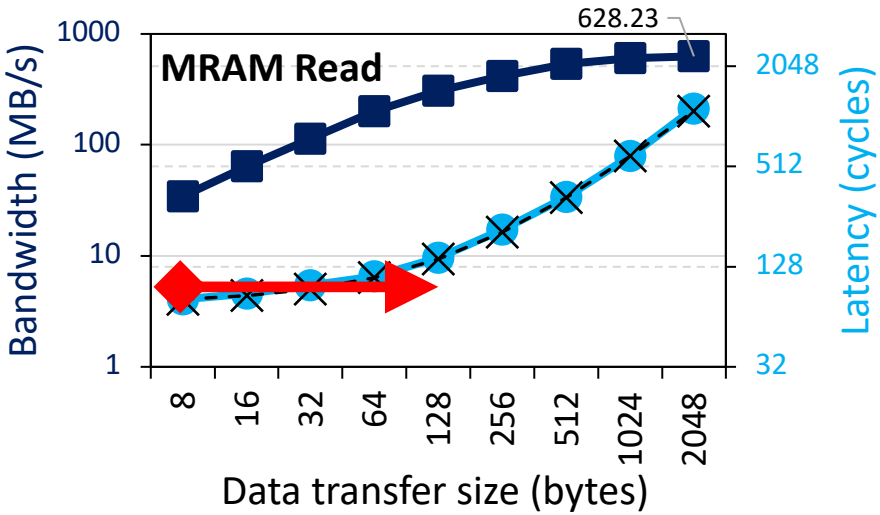

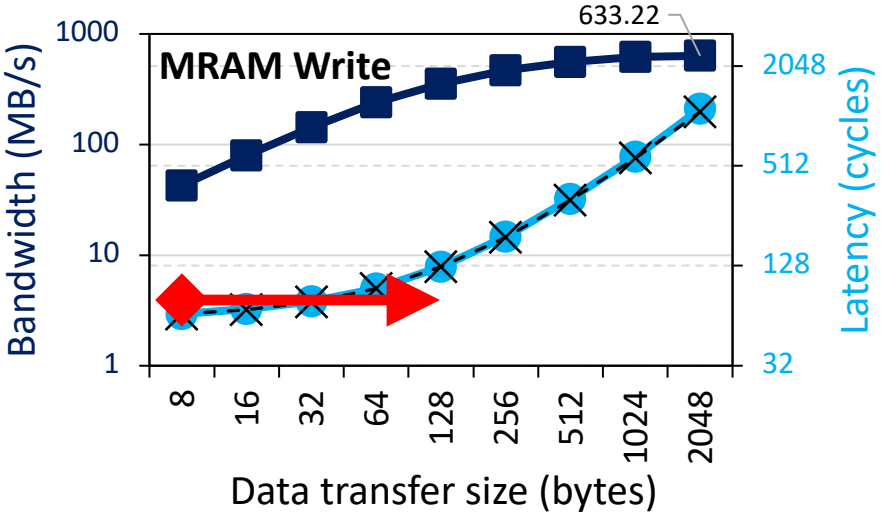

MRAM latency changes slowly between 8 and 128 bytes

For small transfers, the fixed cost (α) dominates the variable cost ($\beta \times size$)

PROGRAMMING RECOMMENDATION 2

For small transfers between the MRAM bank and the WRAM, **fetch more bytes than necessary within a 128-byte limit**. Doing so increases the likelihood of finding data in WRAM for later accesses (i.e., the program can check whether the desired data is in WRAM before issuing a new MRAM access).

MRAM Read and Write Latency (V)

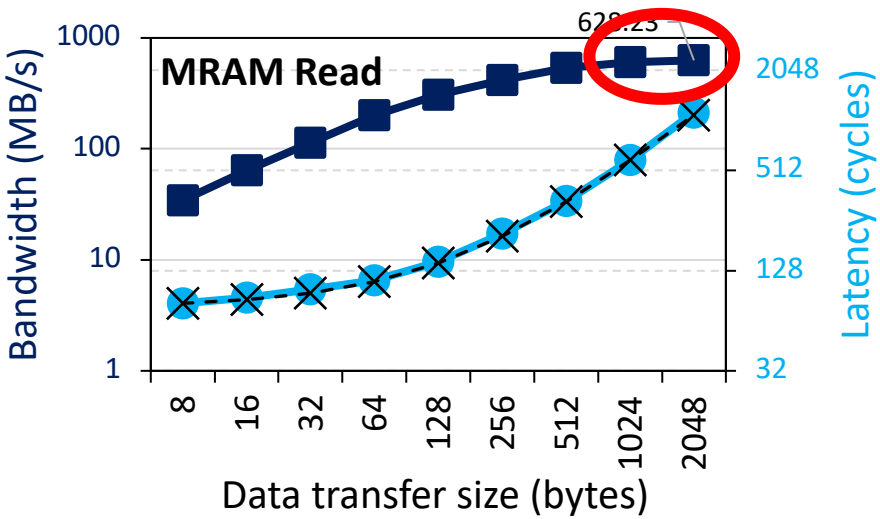

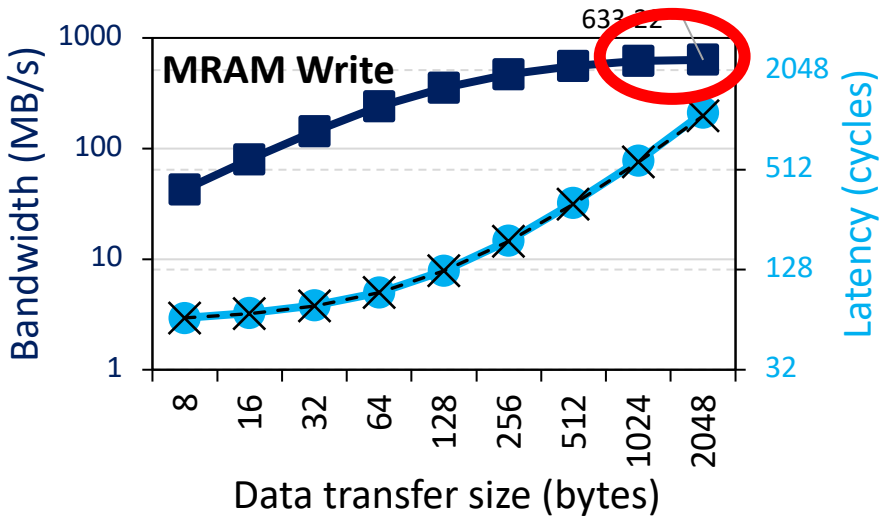

2,048-byte transfers are only 4% faster than 1,024-byte transfers

Larger transfers require more WRAM, which may limit the number of tasklets

PROGRAMMING RECOMMENDATION 3

Choose the data transfer size between the MRAM bank and the WRAM based on the program's WRAM usage, as it imposes a tradeoff between the sustained MRAM bandwidth and the number of tasklets that can run in the DPU (which is dictated by the limited WRAM capacity).

MRAM Bandwidth

- Goal
  - Measure MRAM bandwidth for different access patterns

- Microbenchmarks
  - Latency of a single DMA transfer for different transfer sizes
    - `mram_read();  // MRAM-WRAM DMA transfer`
    - `mram_write(); // WRAM-MRAM DMA transfer`
  - STREAM benchmark
    - COPY, COPY-DMA
    - ADD, SCALE, TRIAD
  - Strided access pattern
    - Coarse-grain strided access
    - Fine-grain strided access
  - Random access pattern (GUPS)

- We do include accesses to MRAM

STREAM Benchmark in MRAM

```
// COPY
// Load current MRAM block to WRAM
mram_read((__mram_ptr void const*)mram_address_A, bufferA,
            SIZE * sizeof(uint64_t));

for(int i = 0; i < SIZE; i++){
    bufferB[i] = bufferA[i];
}

// Write WRAM block to MRAM
mram_write(bufferB, (__mram_ptr void*)mram_address_B,
            SIZE * sizeof(uint64_t));

// COPY-DMA
// Load current MRAM block to WRAM
mram_read((__mram_ptr void const*)mram_address_A, bufferA,
            SIZE * sizeof(uint64_t));

// Write WRAM block to MRAM
mram_write(bufferA, (__mram_ptr void*)mram_address_B,
            SIZE * sizeof(uint64_t));
```

STREAM Benchmark: COPY-DMA

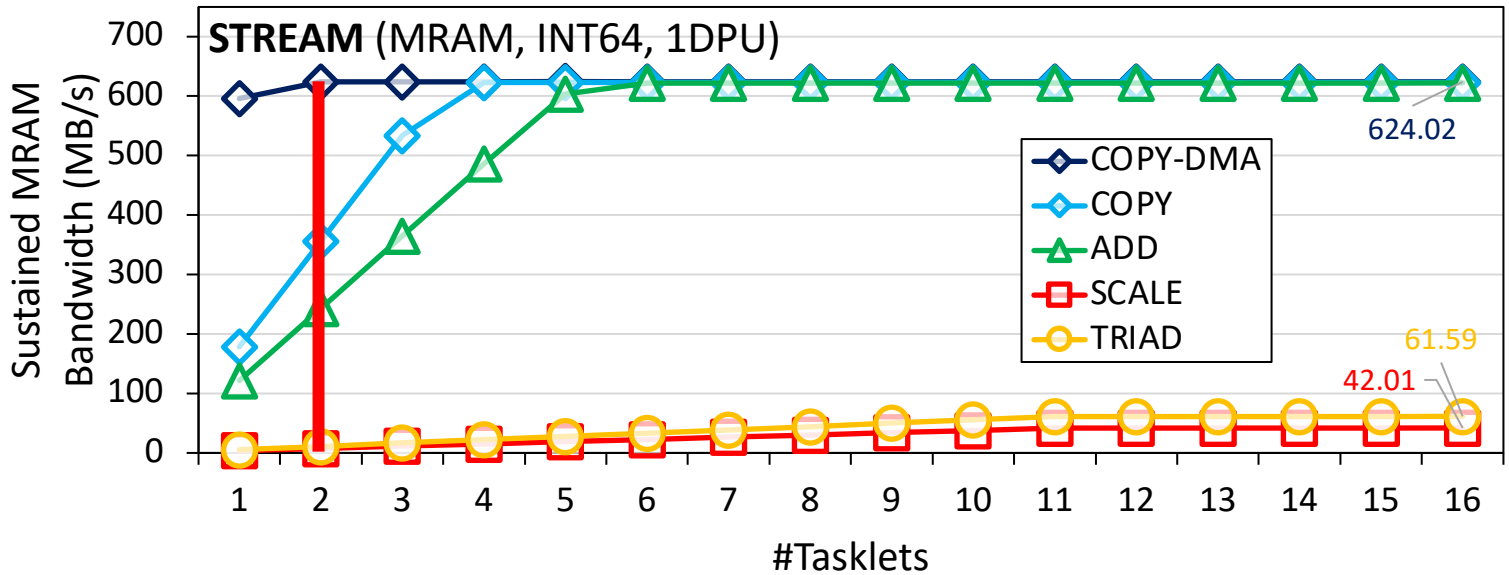

The sustained bandwidth of **COPY-DMA** is close to the theoretical maximum (700 MB/s): ~1.6 TB/s for 2,556 DPUs

COPY-DMA saturates with two tasklets, even though the DMA engine can perform only one transfer at a time

Using two or more tasklets guarantees that there is always a DMA request enqueued to keep the DMA engine busy

STREAM Benchmark: Bandwidth Saturation (I)

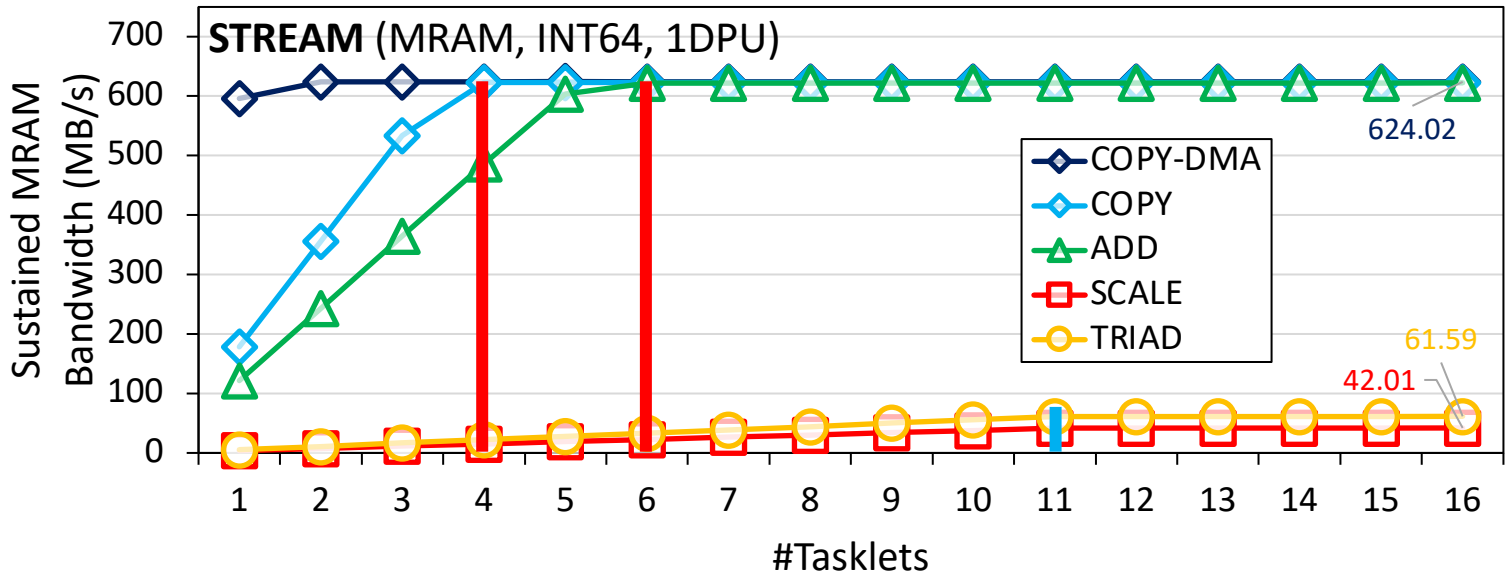

COPY and **ADD** saturate at 4 and 6 tasklets, respectively

SCALE and **TRIAD** saturate at 11 tasklets

The latency of MRAM accesses becomes longer than the pipeline latency after 4 and 6 tasklets for **COPY** and **ADD**, respectively

The pipeline latency of **SCALE** and **TRIAD** is longer than the MRAM latency for any number of tasklets (both use costly MUL)

STREAM Benchmark: Bandwidth Saturation (II)

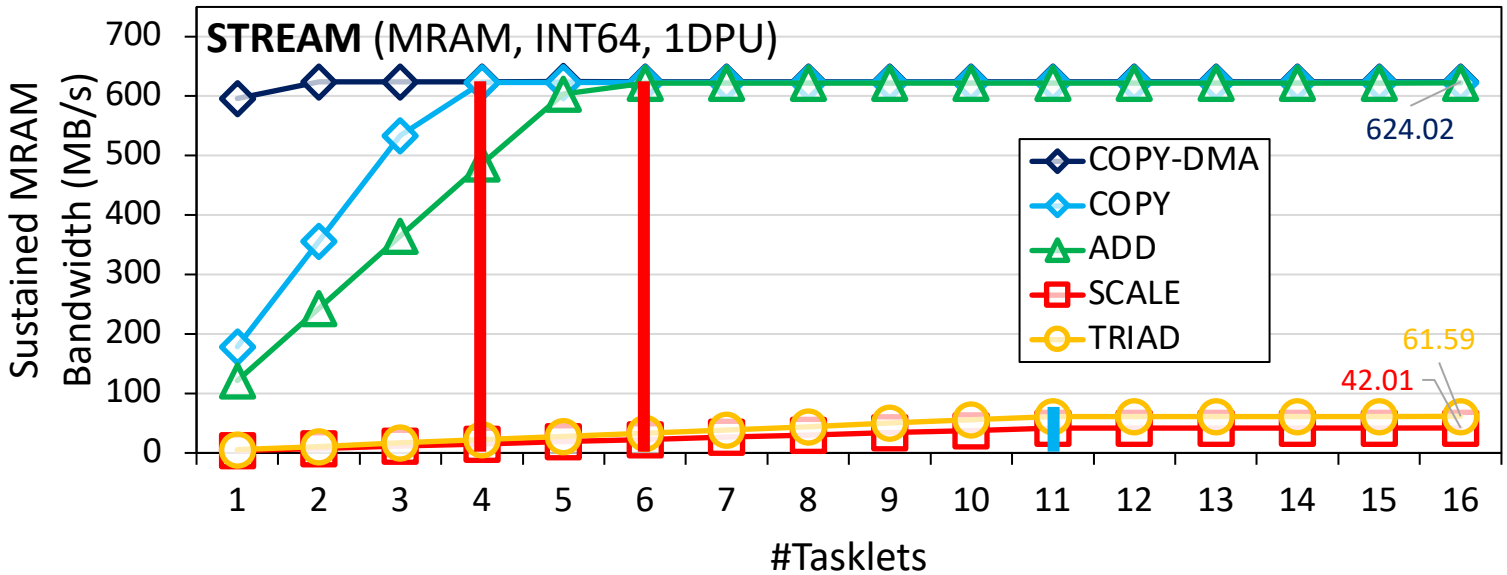

KEY OBSERVATION 5

- **When the access latency to an MRAM bank** for a streaming benchmark (COPY-DMA, COPY, ADD) **is larger than the pipeline latency** (i.e., execution latency of arithmetic operations and WRAM accesses), the performance of the DPU saturates at a number of tasklets smaller than 11. **This is a memory-bound workload.**
- **When the pipeline latency** for a streaming benchmark (SCALE, TRIAD) **is larger than the MRAM access latency**, the performance of a DPU saturates at 11 tasklets. **This is a compute-bound workload.**

MRAM Bandwidth

- Goal
  - Measure MRAM bandwidth for different access patterns

- Microbenchmarks
  - Latency of a single DMA transfer for different transfer sizes
    - `mram_read();  // MRAM-WRAM DMA transfer`
    - `mram_write(); // WRAM-MRAM DMA transfer`
  - STREAM benchmark
    - COPY, COPY-DMA
    - ADD, SCALE, TRIAD
  - Strided access pattern
    - Coarse-grain strided access
    - Fine-grain strided access
  - Random access pattern (GUPS)

- We do include accesses to MRAM

Strided and Random Access to MRAM

```
// COARSE-GRAINED STRIDED ACCESS
// Load current MRAM block to WRAM
mram_read((__mram_ptr void const*)mram_address_A, bufferA,
        SIZE * sizeof(uint64_t));
mram_read((__mram_ptr void const*)mram_address_B, bufferB,
        SIZE * sizeof(uint64_t));

for(int i = 0; i < SIZE; i += stride){
    bufferB[i] = bufferA[i];
}
// Write WRAM block to MRAM
mram_write(bufferB, (__mram_ptr void*)mram_address_B,
        SIZE * sizeof(uint64_t));


// FINE-GRAINED STRIDED & RANDOM ACCESS
for(int i = 0; i < SIZE; i += stride){
    int index = i * sizeof(uint64_t);
    // Load current MRAM element to WRAM
    mram_read((__mram_ptr void const*)(mram_address_A + index), bufferA,
            sizeof(uint64_t));

    // Write WRAM element to MRAM
    mram_write(bufferA, (__mram_ptr void*)(mram_address_B + index),
            sizeof(uint64_t));
}
```

Strided and Random Accesses (I)

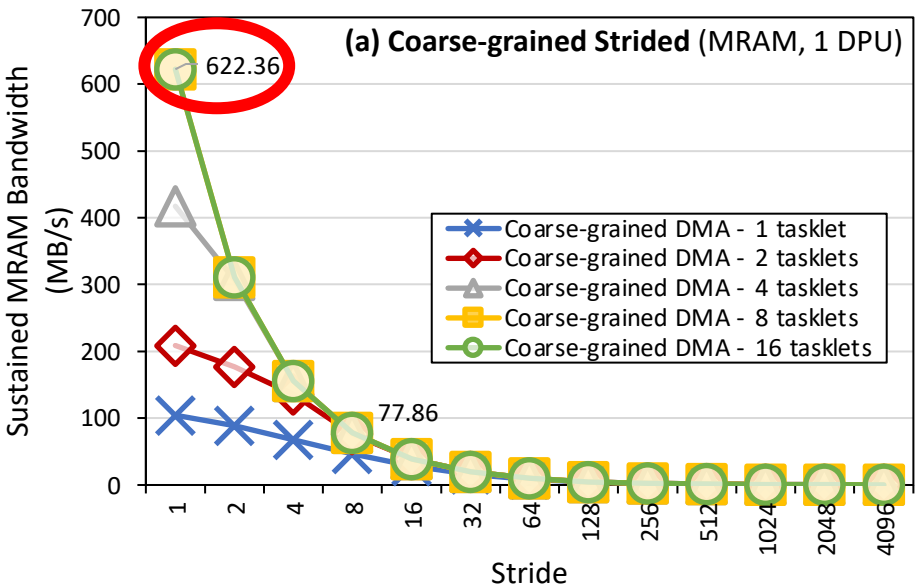

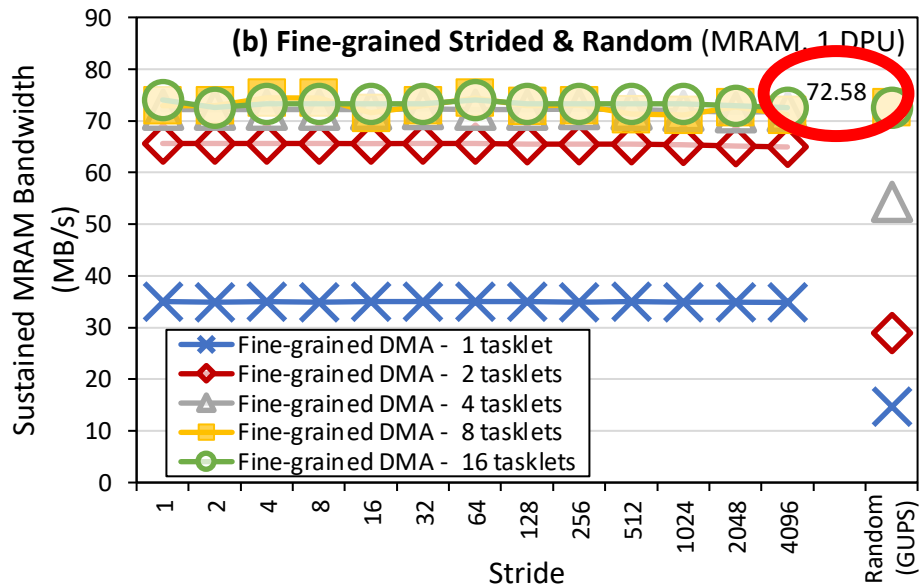

Large difference in maximum sustained bandwidth between coarse-grained and fine-grained DMA

Coarse-grained DMA uses 1,024-byte transfers, while fine-grained DMA uses 8-byte transfers

Random access achieves very similar maximum sustained bandwidth to fine-grained strided approach

Strided and Random Accesses (II)

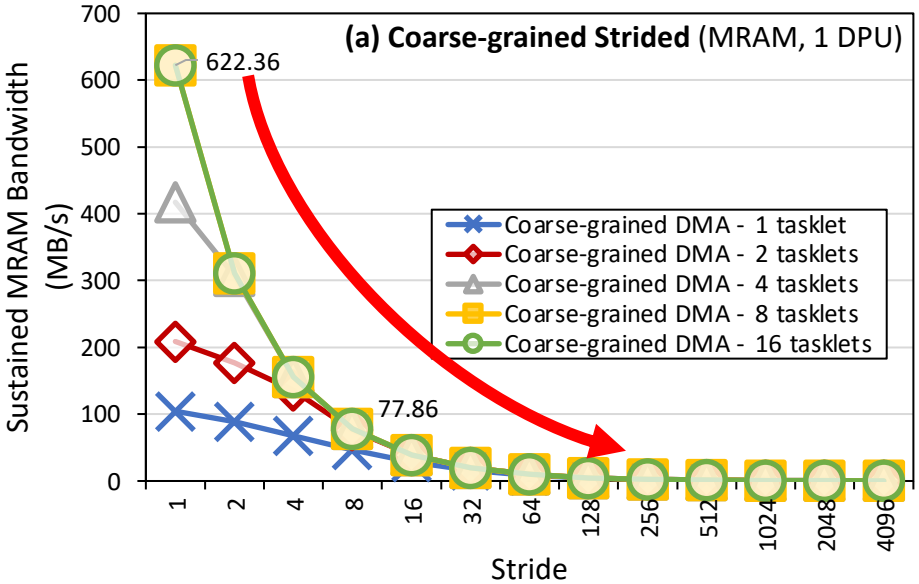

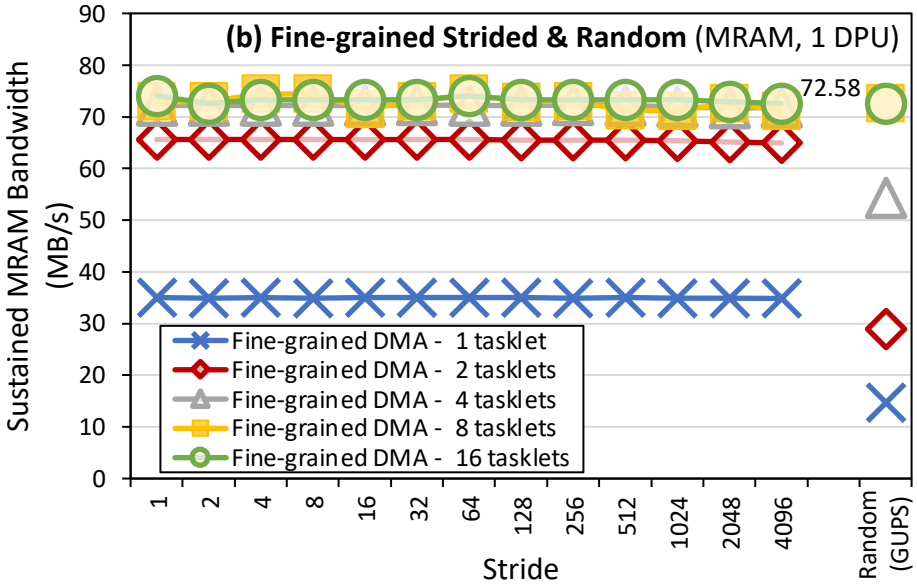

The sustained MRAM bandwidth of coarse-grained DMA decreases as the stride increases

The effective utilization of the transferred data decreases as the stride becomes larger (e.g., a stride 4 means that only one fourth of the transferred data is used)

Strided and Random Accesses (III)

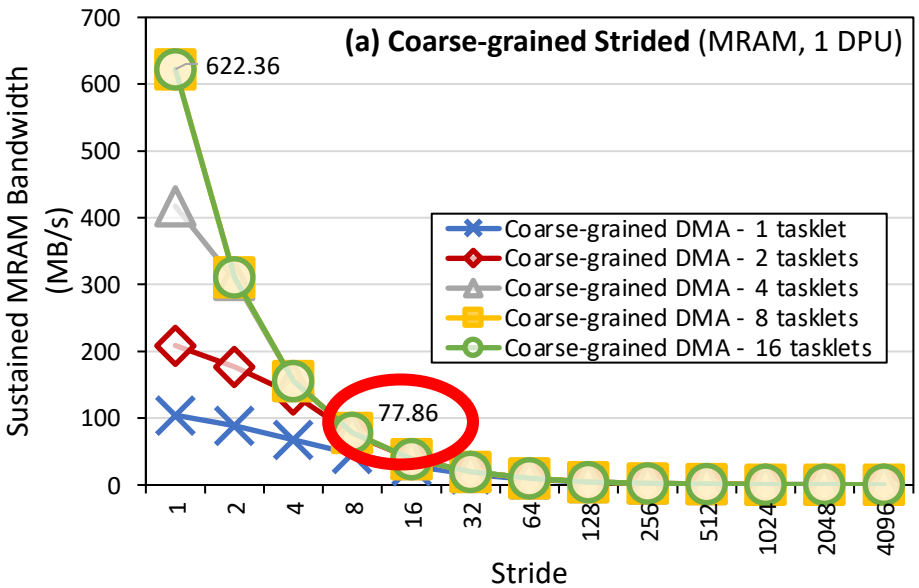

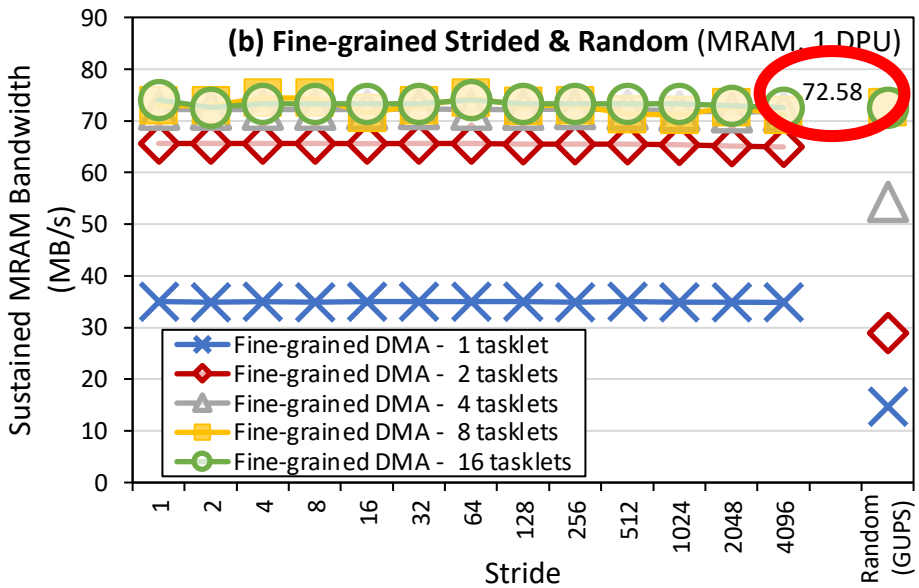

For a stride of 16 or larger, the fine-grained DMA approach achieves higher bandwidth

With stride 16, only one sixteenth of the maximum sustained bandwidth (622.36 MB/s) of coarse-grained DMA is effectively used, which is lower than the bandwidth of fine-grained DMA (72.58 MB/s)

Strided and Random Accesses (IV)

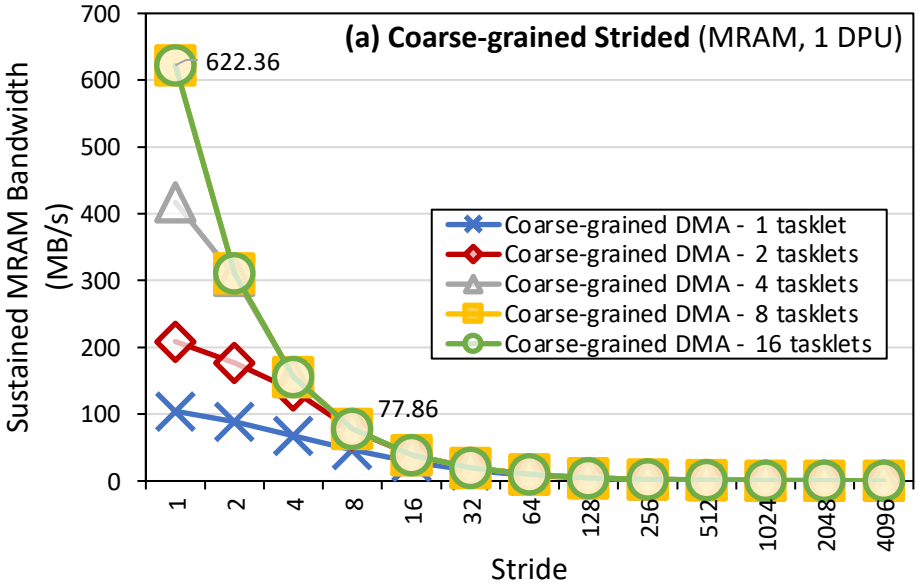

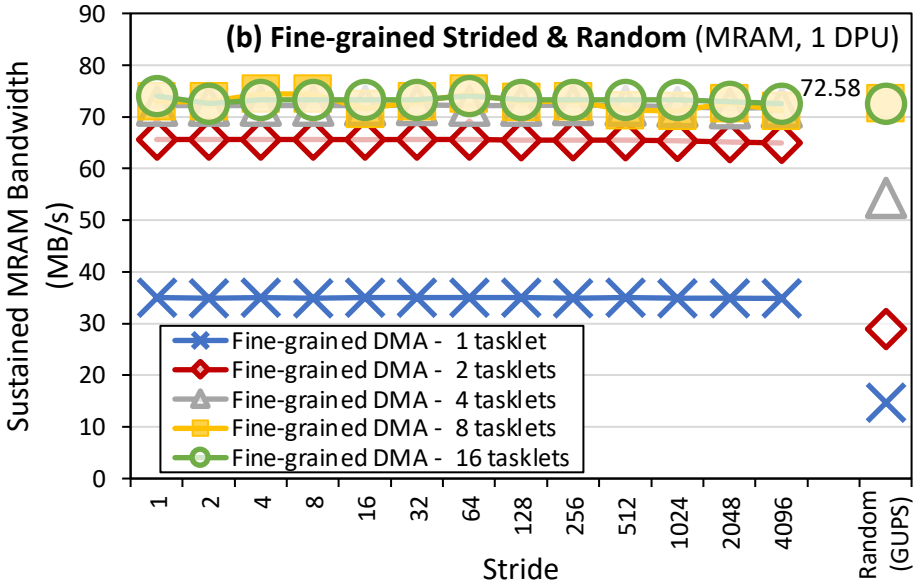

PROGRAMMING RECOMMENDATION 4

- For strided access patterns with a **stride smaller than 16 8-byte elements, fetch a large contiguous chunk** (e.g., 1,024 bytes) from a DPU's MRAM bank.
- For strided access patterns with **larger strides and random access patterns**, fetch **only the data elements that are needed** from an MRAM bank.

Microbenchmark: Strided and Random

- Strided and random accesses to MRAM

CMU-SAFARI / prim-benchmarks

Unwatch 2 | Star 2 | Fork 1

Code | Issues | Pull requests | Actions | Projects | Wiki | Security | Insights | Settings

main | prim-benchmarks / Microbenchmarks / STRIDED / | Go to file | Add file | ···

main | prim-benchmarks / Microbenchmarks / Random-GUPS / | Go to file | Add file | ···

Juan Gomez Luna PrIM -- first commit 3de4b49 9 days ago History

..		
dpu	PrIM -- first commit	9 days ago
host	PrIM -- first commit	9 days ago
support	PrIM -- first commit	9 days ago
Makefile	PrIM -- first commit	9 days ago
run.sh	PrIM -- first commit	9 days ago

DPU: Arithmetic Throughput vs. Operational Intensity

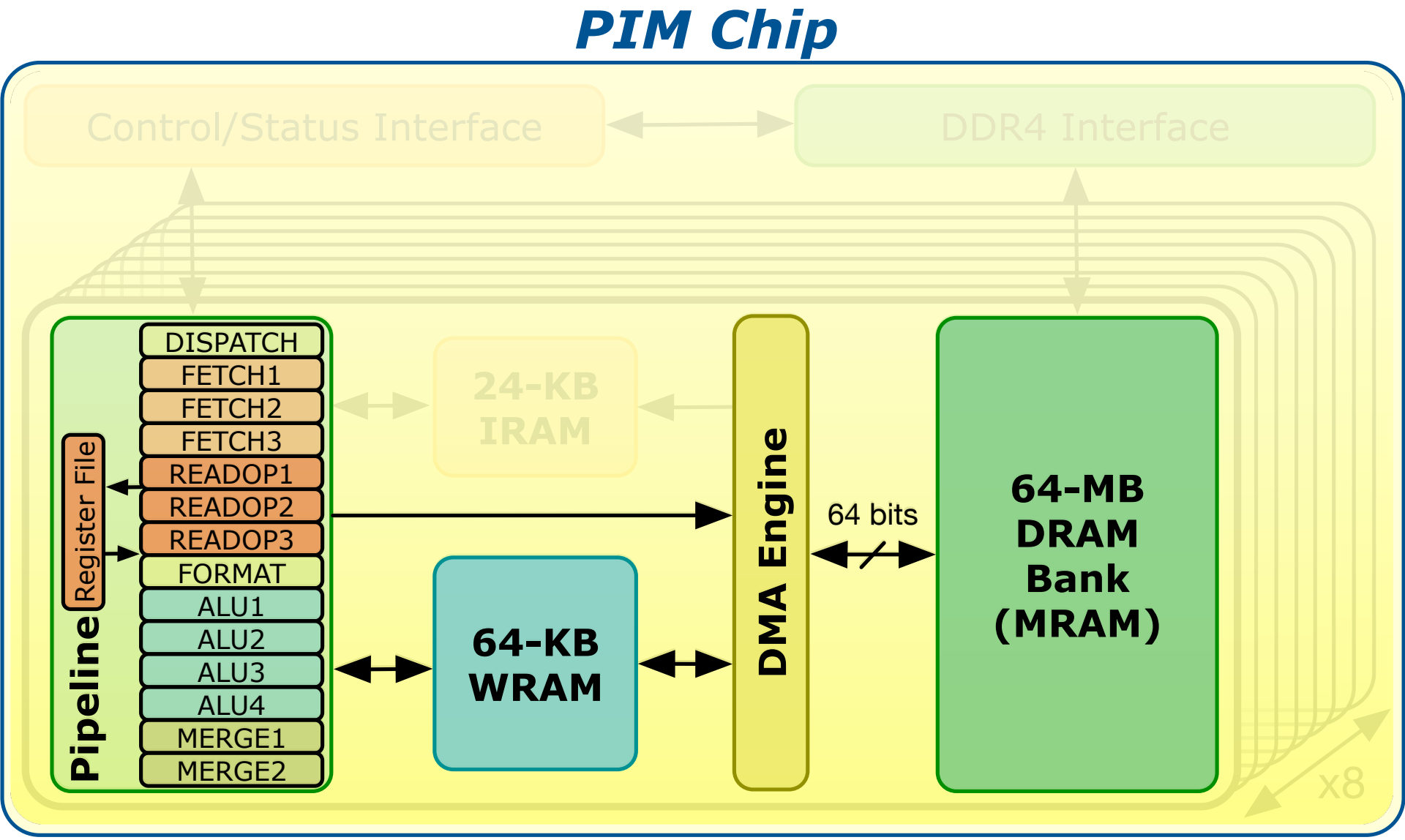

Arithmetic Throughput vs. Operational Intensity (I)

- Goal
  - Characterize memory-bound regions and compute-bound regions for different datatypes and operations
- Microbenchmark
  - We load one chunk of an MRAM array into WRAM
  - Perform a variable number of operations on the data
  - Write back to MRAM
- The experiment is inspired by the Roofline model*
- We define operational intensity (OI) as the number of arithmetic operations performed per byte accessed from MRAM (OP/B)
- The pipeline latency changes with the operational intensity, but the MRAM access latency is fixed

*S. Williams et al., "Roofline: An Insightful Visual Performance Model for Multi-core Architectures," CACM, 2009

Arithmetic Throughput vs. Operational Intensity (II)

```
int repetitions = input_repeat >= 1.0 ? (int)input_repeat : 1;
int stride      = input_repeat >= 1.0 ? 1 : (int)(1 / input_repeat);

// Load current MRAM block to WRAM
mram_read((__mram_ptr void const*)mram_address_A, bufferA, SIZE * sizeof(T));

// Update
for(int r = 0; r < repetitions; r++){
    for(int i = 0; i < SIZE; i+=stride){
#ifdef ADD
        bufferA[i] += scalar; // ADD
#elif SUB
        bufferA[i] -= scalar; // SUB
#elif MUL
        bufferA[i] *= scalar; // MUL
#elif DIV
        bufferA[i] /= scalar; // DIV
#endif
    }
}

// Write WRAM block to MRAM
mram_write(bufferA, (__mram_ptr void*)mram_address_B, SIZE * sizeof(T));
```

`input_repeat` greater or equal to 1 indicates the (integer) number of repetitions per input element

`input_repeat` smaller than 1 indicates the fraction of elements that are updated

Arithmetic Throughput vs. Operational Intensity (III)

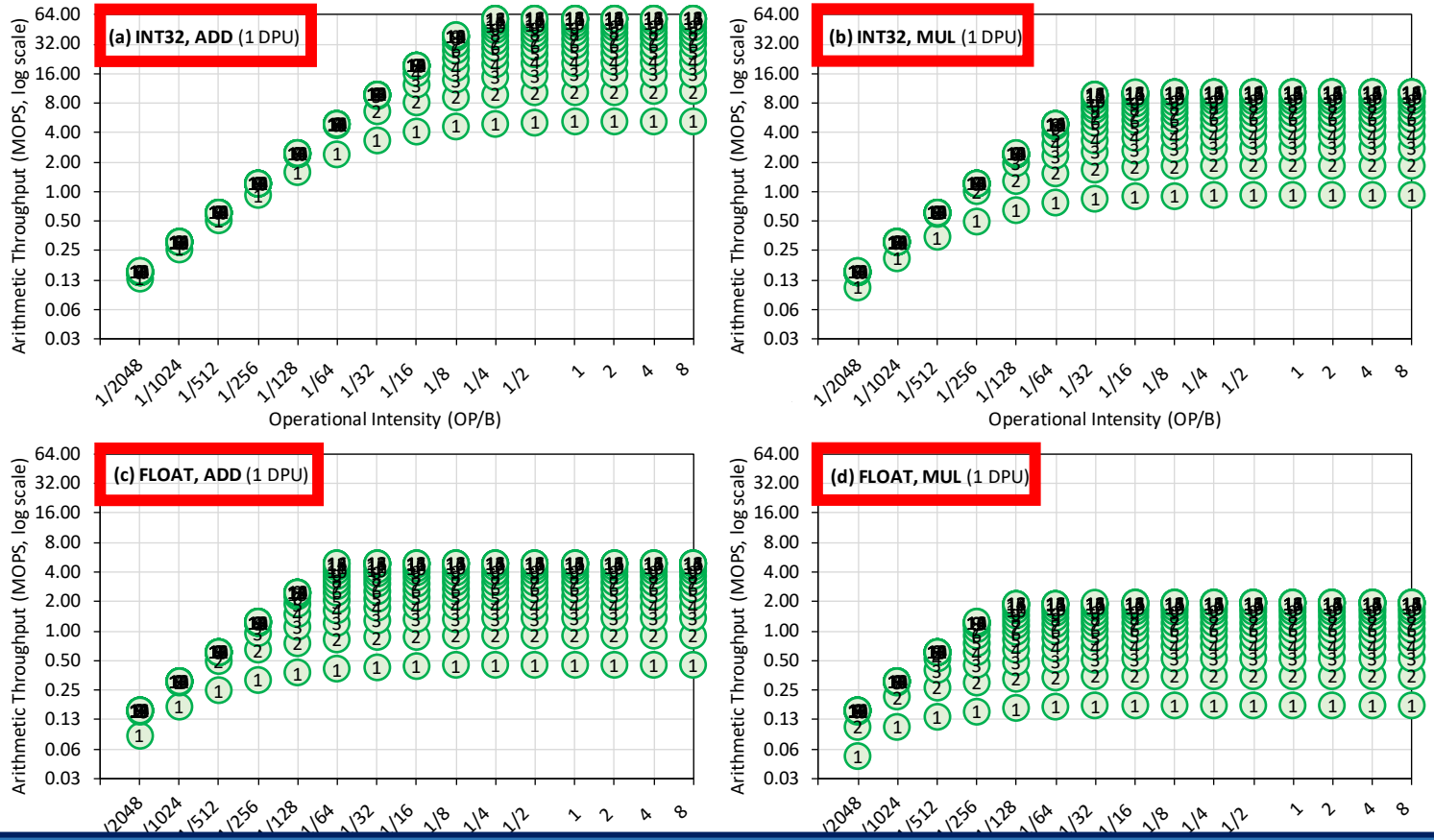

We show results of arithmetic throughput vs. operational intensity for (a) 32-bit integer ADD, (b) 32-bit integer MUL, (c) 32-bit floating-point ADD, and (d) 32-bit floating-point MUL (results for other datatypes and operations show similar trends)

Arithmetic Throughput vs. Operational Intensity (IV)

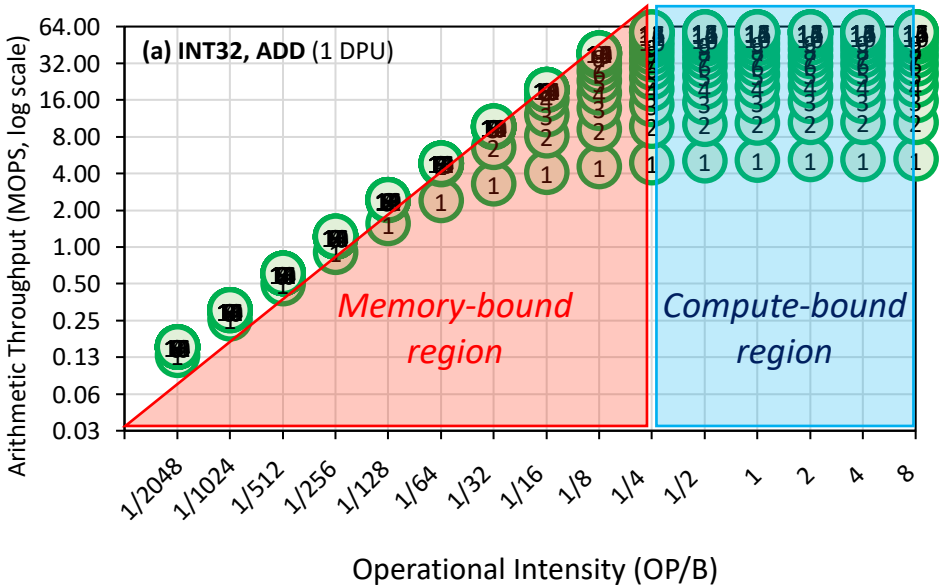

In the memory-bound region, the arithmetic throughput increases with the operational intensity

In the compute-bound region, the arithmetic throughput is flat at its maximum

The *throughput saturation point* is the operational intensity where the transition between the memory-bound region and the compute-bound region happens

The throughput saturation point is as low as ¼ OP/B, i.e., 1 integer addition per every 32-bit element fetched

Arithmetic Throughput vs. Operational Intensity (V)

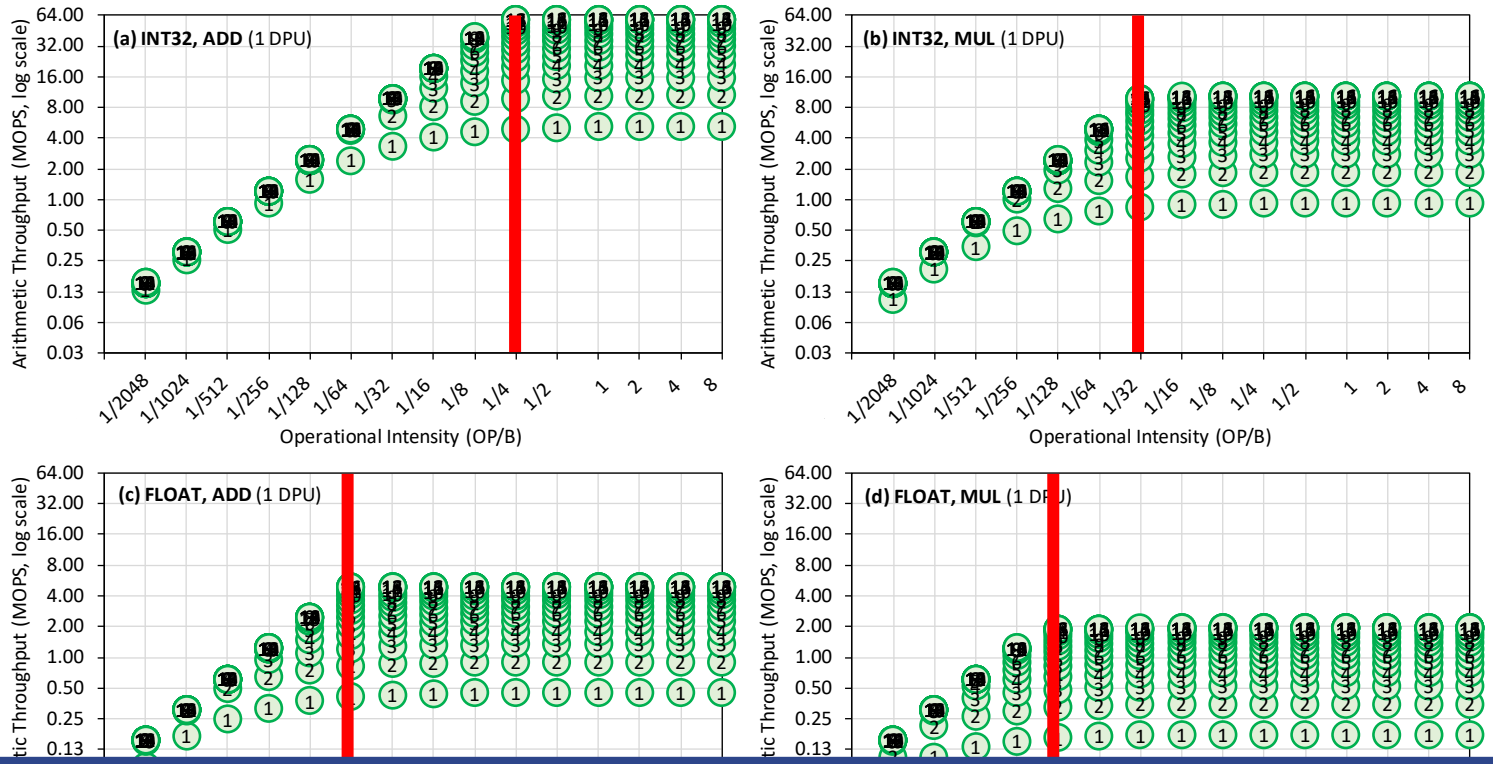

KEY OBSERVATION 6

The arithmetic throughput of a DRAM Processing Unit (DPU) saturates at low or very low operational intensity (e.g., 1 integer addition per 32-bit element). Thus, **the DPU is fundamentally a compute-bound processor.**
We expect **most real-world workloads be compute-bound in the UPMEM PIM architecture**.

Microbenchmark: Arithmetic Throughput vs. Operational Intensity

- Arithmetic Throughput versus Operational Intensity

CMU-SAFARI / **prim-benchmarks**

Unwatch 2 | Star 2 | Fork 1

Code | Issues | Pull requests | Actions | Projects | Wiki | Security | Insights | Settings

main | prim-benchmarks / Microbenchmarks / **Operational-Intensity** / | Go to file | Add file | ···

Juan Gomez Luna PrIM -- first commit 3de4b49 9 days ago History

..		
dpu	PrIM -- first commit	9 days ago
host	PrIM -- first commit	9 days ago
support	PrIM -- first commit	9 days ago
Makefile	PrIM -- first commit	9 days ago
run.sh	PrIM -- first commit	9 days ago

Benchmarking and Workload Suitability

PrIM Benchmarks

- Goal
  - A common set of workloads that can be used to
    - evaluate the UPMEM PIM architecture,
    - compare software improvements and compilers,
    - compare future PIM architectures and hardware

- Two key selection criteria:
  - Selected workloads from different application domains
  - Memory-bound workloads on processor-centric architectures

- 14 different workloads, 16 different benchmarks*

*There are two versions for two of the workloads (HST, SCAN).

PrIM Benchmarks: Application Domains

Domain	Benchmark	Short name
Dense linear algebra	Vector Addition	VA
	Matrix-Vector Multiply	GEMV
Sparse linear algebra	Sparse Matrix-Vector Multiply	SpMV
Databases	Select	SEL
	Unique	UNI
Data analytics	Binary Search	BS
	Time Series Analysis	TS
Graph processing	Breadth-First Search	BFS
Neural networks	Multilayer Perceptron	MLP
Bioinformatics	Needleman-Wunsch	NW
Image processing	Image histogram (short)	HST-S
	Image histogram (large)	HST-L
Parallel primitives	Reduction	RED
	Prefix sum (scan-scan-add)	SCAN-SSA
	Prefix sum (reduce-scan-scan)	SCAN-RSS
	Matrix transposition	TRNS

Roofline Model

- Intel Advisor on an Intel Xeon E3-1225 v6 CPU

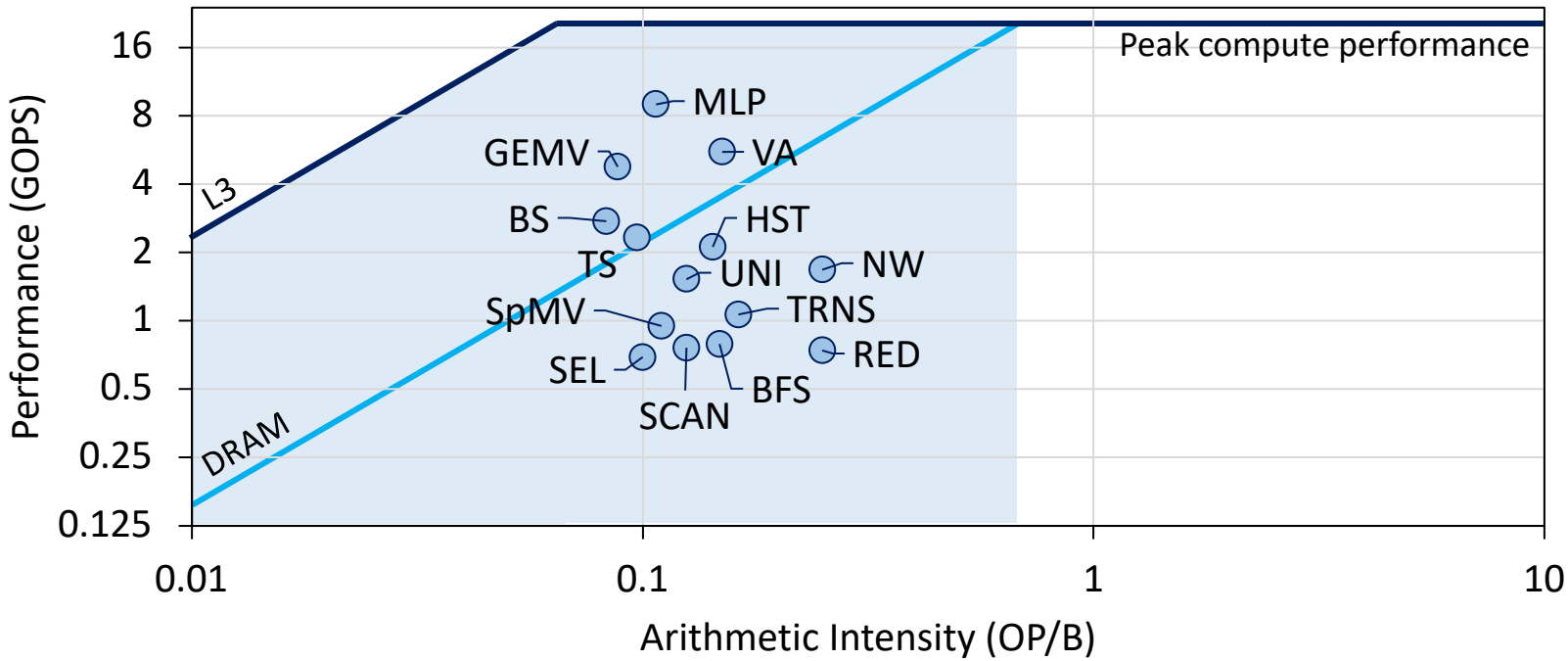

All workloads fall in the memory-bound area of the Roofline

PrIM Benchmarks: Diversity

- PrIM benchmarks are diverse:
  - Memory access patterns
  - Operations and datatypes
  - Communication/synchronization

Domain	Benchmark	Short name	Memory access pattern			Computation pattern		Communication/synchronization	
			Sequential	Strided	Random	Operations	Datatype	Intra-DPU	Inter-DPU
Dense linear algebra	Vector Addition	VA	Yes			add	int32_t		
	Matrix-Vector Multiply	GEMV	Yes			add, mul	uint32_t		
Sparse linear algebra	Sparse Matrix-Vector Multiply	SpMV	Yes		Yes	add, mul	float		
Databases	Select	SEL	Yes			add, compare	int64_t	handshake, barrier	Yes
	Unique	UNI	Yes			add, compare	int64_t	handshake, barrier	Yes
Data analytics	Binary Search	BS	Yes		Yes	compare	int64_t		
	Time Series Analysis	TS	Yes			add, sub, mul, div	int32_t		
Graph processing	Breadth-First Search	BFS	Yes		Yes	bitwise logic	uint64_t	barrier, mutex	Yes
Neural networks	Multilayer Perceptron	MLP	Yes			add, mul, compare	int32_t		
Bioinformatics	Needleman-Wunsch	NW	Yes	Yes		add, sub, compare	int32_t	barrier	Yes
Image processing	Image histogram (short)	HST-S	Yes		Yes	add	uint32_t	barrier	Yes
	Image histogram (long)	HST-L	Yes		Yes	add	uint32_t	barrier, mutex	Yes
Parallel primitives	Reduction	RED	Yes	Yes		add	int64_t	barrier	Yes
	Prefix sum (scan-scan-add)	SCAN-SSA	Yes			add	int64_t	handshake, barrier	Yes
	Prefix sum (reduce-scan-scan)	SCAN-RSS	Yes			add	int64_t	handshake, barrier	Yes
	Matrix transposition	TRNS	Yes		Yes	add, sub, mul	int64_t	mutex	

PrIM Benchmarks: Inter-DPU Communication

Domain	Benchmark	Short name	Memory access pattern			Computation pattern		Communication/synchronization	
			Sequential	Strided	Random	Operations	Datatype	Intra-DPU	Inter-DPU
Dense linear algebra	Vector Addition	VA	Yes			add	int32_t		
	Matrix-Vector Multiply	GEMV	Yes			add, mul	uint32_t		
Sparse linear algebra	Sparse Matrix-Vector Multiply	SpMV	Yes		Yes	add, mul	float		
Databases	Select	SEL	Yes			add, compare	int64_t	handshake, barrier	Yes
	Unique	UNI	Yes			add, compare	int64_t	handshake, barrier	Yes
Data analytics	Binary Search	BS	Yes		Yes	compare	int64_t		
	Time Series Analysis	TS	Yes			add, sub, mul, div	int32_t		
Graph processing	Breadth-First Search	BFS	Yes		Yes	bitwise logic	uint64_t	barrier, mutex	Yes
Neural networks	Multilayer Perceptron	MLP	Yes			add, mul, compare	int32_t		
Bioinformatics	Needleman-Wunsch	NW	Yes	Yes		add, sub, compare	int32_t	barrier	Yes
Image processing	Image histogram (short)	HST-S	Yes		Yes	add	uint32_t	barrier	Yes
	Image histogram (long)	HST-L	Yes		Yes	add	uint32_t	barrier, mutex	Yes
Parallel primitives	Reduction	RED	Yes	Yes		add	int64_t	barrier	Yes
	Prefix sum (scan-scan-add)	SCAN-SSA	Yes			add	int64_t	handshake, barrier	Yes
	Prefix sum (reduce-scan-scan)	SCAN-RSS	Yes			add	int64_t	handshake, barrier	Yes
	Matrix Transposition	TRNS	Yes		Yes	add, sub, mul	int64_t	mutex	

- Inter-DPU communication
  - Result merging:
    - SEL, UNI, HST-S, HST-L, RED
    - Only DPU-CPU transfers
  - Redistribution of intermediate results:
    - BFS, MLP, NW, SCAN-SSA, SCAN-RSS
    - DPU-CPU and CPU-DPU transfers

PrIM Benchmarks

- 16 benchmarks and scripts for evaluation
- https://github.com/CMU-SAFARI/prim-benchmarks

CMU-SAFARI / prim-benchmarks

Code | Issues | Pull requests | Actions | Projects | Wiki | Security | Insights | Settings

main | 1 branch | 0 tags | Go to file | Add file | Code

Juan Gomez Luna PrIM -- first commit 3de4b49 15 days ago 2 commits

BFS	PrIM -- first commit	15 days ago
BS	PrIM -- first commit	15 days ago
GEMV	PrIM -- first commit	15 days ago
HST-L	PrIM -- first commit	15 days ago
HST-S	PrIM -- first commit	15 days ago
MLP	PrIM -- first commit	15 days ago
Microbenchmarks	PrIM -- first commit	15 days ago
NW	PrIM -- first commit	15 days ago
RED	PrIM -- first commit	15 days ago
SCAN-RSS	PrIM -- first commit	15 days ago
SCAN-SSA	PrIM -- first commit	15 days ago
SEL	PrIM -- first commit	15 days ago
SpMV	PrIM -- first commit	15 days ago
TRNS	PrIM -- first commit	15 days ago
TS	PrIM -- first commit	15 days ago
UNI	PrIM -- first commit	15 days ago
VA	PrIM -- first commit	15 days ago
LICENSE	PrIM -- first commit	15 days ago
README.md	PrIM -- first commit	15 days ago
run_strong_full.py	PrIM -- first commit	15 days ago
run_strong_rank.py	PrIM -- first commit	15 days ago
run_weak.py	PrIM -- first commit	15 days ago

Outline

- Introduction
  - Accelerator Model
  - UPMEM-based PIM System Overview
- UPMEM PIM Programming
  - Vector Addition
  - CPU-DPU Data Transfers
  - Inter-DPU Communication
  - CPU-DPU/DPU-CPU Transfer Bandwidth
- DRAM Processing Unit
  - Arithmetic Throughput
  - WRAM and MRAM Bandwidth
- PrIM Benchmarks
  - Roofline Model
  - Benchmark Diversity
- Evaluation
  - Strong and Weak Scaling
  - Comparison to CPU and GPU
- Key Takeaways

Evaluation Methodology

- We evaluate the 16 PrIM benchmarks on two UPMEM-based systems:
  - 2,556-DPU system
  - 640-DPU system
- Strong and weak scaling experiments on the 2,556-DPU system
  - 1 DPU with different numbers of tasklets
  - 1 rank (strong and weak)
  - Up to 32 ranks

Strong scaling refers to how the execution time of a program solving a particular problem varies with the number of processors for a fixed problem size

Weak scaling refers to how the execution time of a program solving a particular problem varies with the number of processors for a fixed problem size per processor

Evaluation Methodology

- We evaluate the 16 PrIM benchmarks on two UPMEM-based systems:
  - 2,556-DPU system
  - 640-DPU system
- Strong and weak scaling experiments on the 2,556-DPU system
  - 1 DPU with different numbers of tasklets
  - 1 rank (strong and weak)
  - Up to 32 ranks
- Comparison of both UPMEM-based PIM systems to state-of-the-art CPU and GPU
  - Intel Xeon E3-1240 CPU
  - NVIDIA Titan V GPU

2,560-DPU System

- UPMEM-based PIM system with 20 UPMEM DIMMs of 16 chips each (40 ranks)
  - P21 DIMMs
  - Dual x86 socket
    - UPMEM DIMMs coexist with regular DDR4 DIMMs
    - 2 memory controllers/socket (3 channels each)
    - 2 conventional DDR4 DIMMs on one channel of one controller

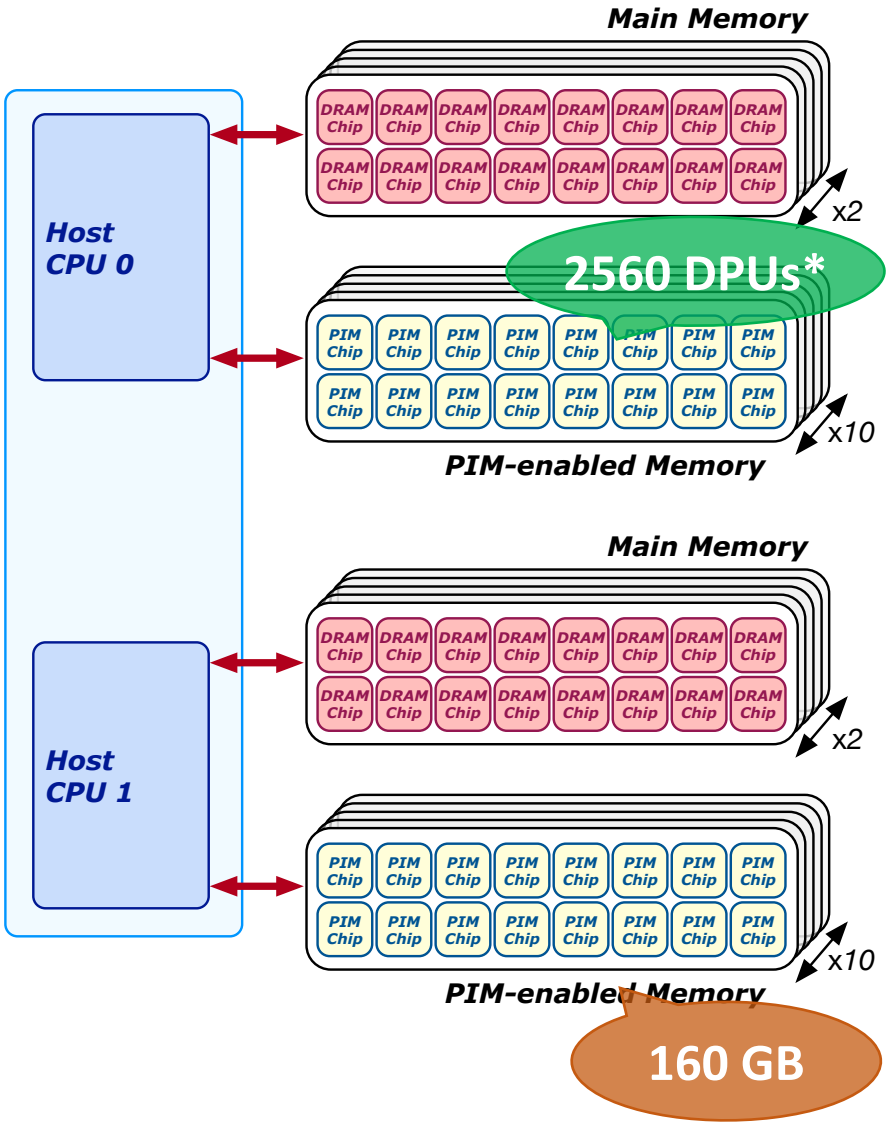

* There are 4 faulty DPUs in the system that we use in our experiments. Thus, the maximum number of DPUs we can use is 2,556.

640-DPU System

- UPMEM-based PIM system with 10 UPMEM DIMMs of 8 chips each (10 ranks)
  - E19 DIMMs
  - x86 socket
    - 2 memory controllers (3 channels each)
    - 2 conventional DDR4 DIMMs on one channel of one controller

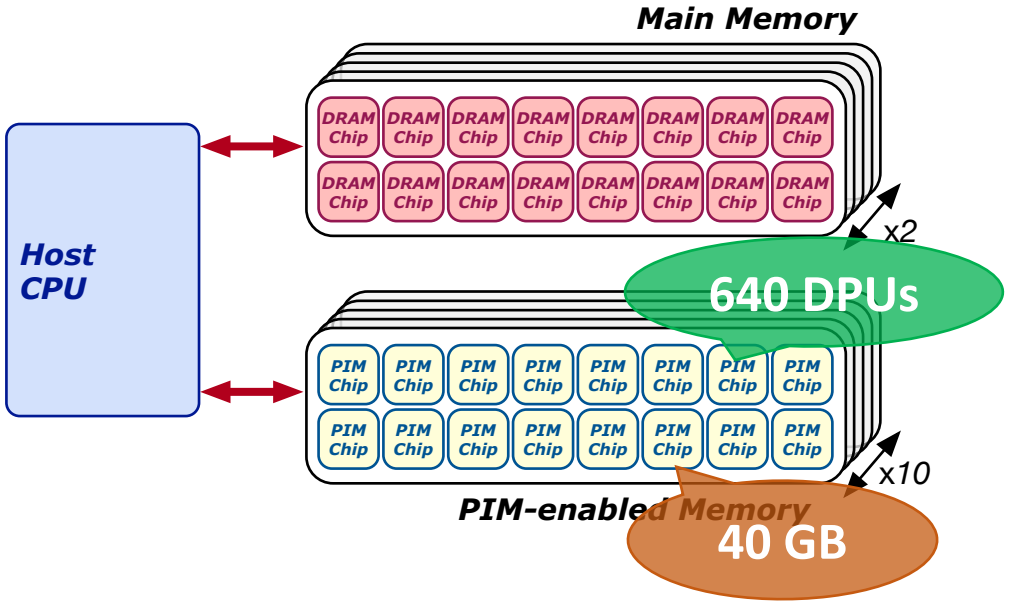

Datasets

- Strong and weak scaling experiments

Benchmark	Strong Scaling Dataset	Weak Scaling Dataset	MRAM-WRAM Transfer Sizes
VA	1 DPU-1 rank: 2.5M elem. (10 MB) | 32 ranks: 160M elem. (640 MB)	2.5M elem./DPU (10 MB)	1024 bytes
GEMV	1 DPU-1 rank: 8192 × 1024 elem. (32 MB) | 32 ranks: 163840 × 4096 elem. (2.56 GB)	1024 × 2048 elem./DPU (8 MB)	1024 bytes
SpMV	*bcsstk30* [253] (12 MB)	*bcsstk30* [253]	64 bytes
SEL	1 DPU-1 rank: 3.8M elem. (30 MB) | 32 ranks: 240M elem. (1.9 GB)	3.8M elem./DPU (30 MB)	1024 bytes
UNI	1 DPU-1 rank: 3.8M elem. (30 MB) | 32 ranks: 240M elem. (1.9 GB)	3.8M elem./DPU (30 MB)	1024 bytes
BS	2M elem. (16 MB). 1 DPU-1 rank: 256K queries. (2 MB) | 32 ranks: 16M queries. (128 MB)	2M elem. (16 MB). 256K queries./DPU (2 MB).	8 bytes
TS	256 elem. query. 1 DPU-1 rank: 512K elem. (2 MB) | 32 ranks: 32M elem. (128 MB)	512K elem./DPU (2 MB)	256 bytes
BFS	*loc-gowalla* [254] (22 MB)	*rMat* [255] (≈100K vertices and 1.2*M* edges per DPU)	8 bytes
MLP	3 fully-connected layers. 1 DPU-1 rank: 2K neurons (32 MB) | 32 ranks: ≈160K neur. (2.56 GB)	3 fully-connected layers. 1K neur./DPU (4 MB)	1024 bytes
NW	1 DPU-1 rank: 2560 bps (50 MB), large/small sub-block=$\frac{2560}{\#DPUs}/2$ | 32 ranks: 64K bps (32 GB), l./s.=32/2	512 bps/DPU (2MB), l./s.=512/2	8, 16, 32, 40 bytes
HST-S	1 DPU-1 rank: 1536 × 1024 input image [256] (6 MB) | 32 ranks: 64 × input image	1536 × 1024 input image [256]/DPU (6 MB)	1024 bytes
HST-L	1 DPU-1 rank: 1536 × 1024 input image [256] (6 MB) | 32 ranks: 64 × input image	1536 × 1024 input image [256]/DPU (6 MB)	1024 bytes
RED	1 DPU-1 rank: 6.3M elem. (50 MB) | 32 ranks: 400M elem. (3.1 GB)	6.3M elem./DPU (50 MB)	1024 bytes
SCAN-SSA	1 DPU-1 rank: 3.8M elem. (30 MB) | 32 ranks: 240M elem. (1.9 GB)	3.8M elem./DPU (30 MB)	1024 bytes
SCAN-RSS	1 DPU-1 rank: 3.8M elem. (30 MB) | 32 ranks: 240M elem. (1.9 GB)	3.8M elem./DPU (30 MB)	1024 bytes
TRNS	1 DPU-1 rank: 12288 × 16 × 64 × 8 (768 MB) | 32 ranks: 12288 × 16 × 2048 × 8 (24 GB)	12288 × 16 × 1 × 8/DPU (12 MB)	128, 1024 bytes

The PrIM benchmarks repository includes
all datasets and scripts used in our evaluation
https://github.com/CMU-SAFARI/prim-benchmarks

Strong Scaling: 1 DPU (I)

- Strong scaling experiments on 1 DPU
  - We set the number of tasklets to 1, 2, 4, 8, and 16
  - We show the breakdown of execution time:
    - DPU: Execution time on the DPU
    - Inter-DPU: Time for inter-DPU communication via the host CPU
    - CPU-DPU: Time for CPU to DPU transfer of input data
    - DPU-CPU: Time for DPU to CPU transfer of final results
  - Speedup over 1 tasklet

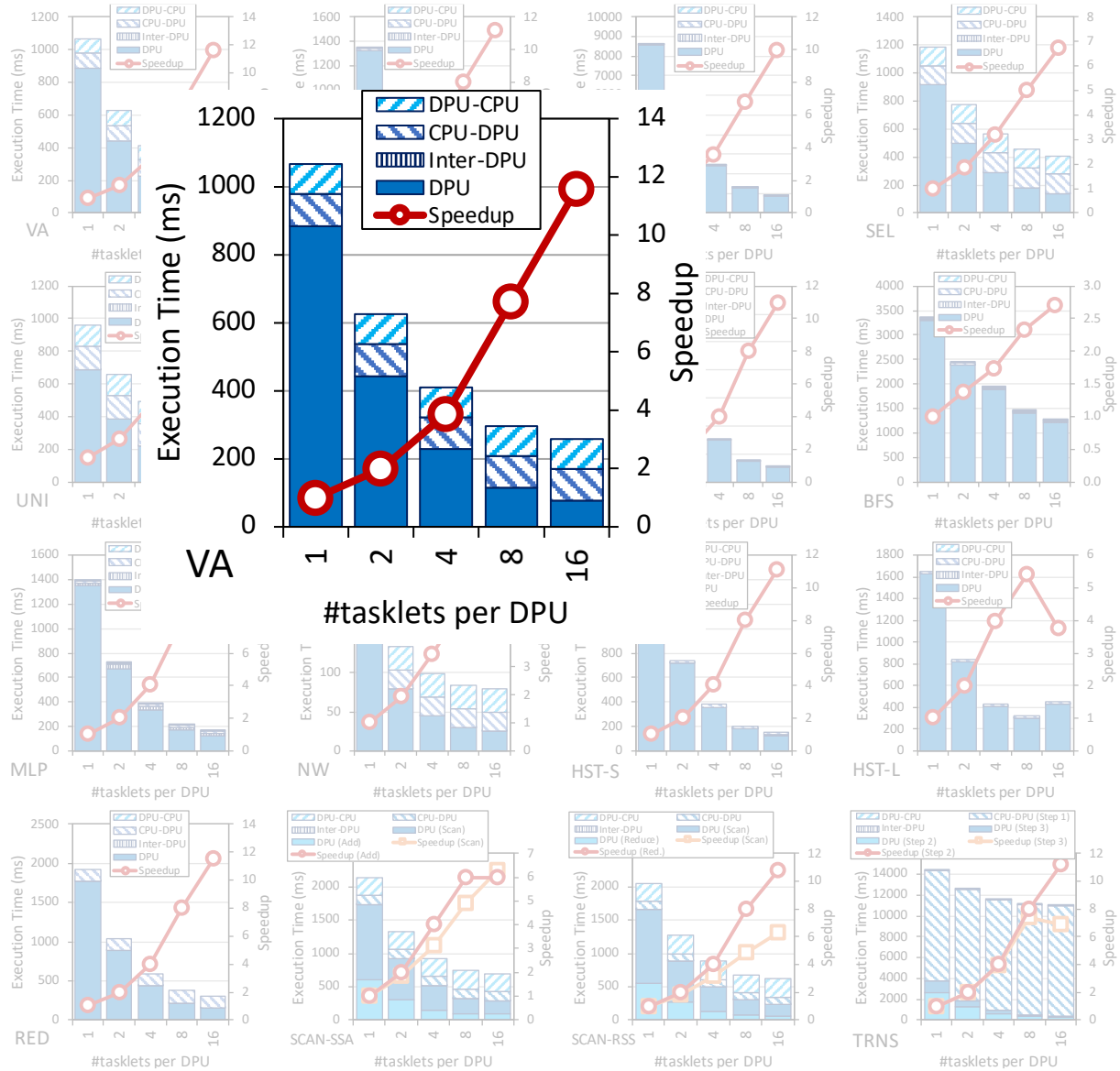

Strong Scaling: 1 DPU (II)

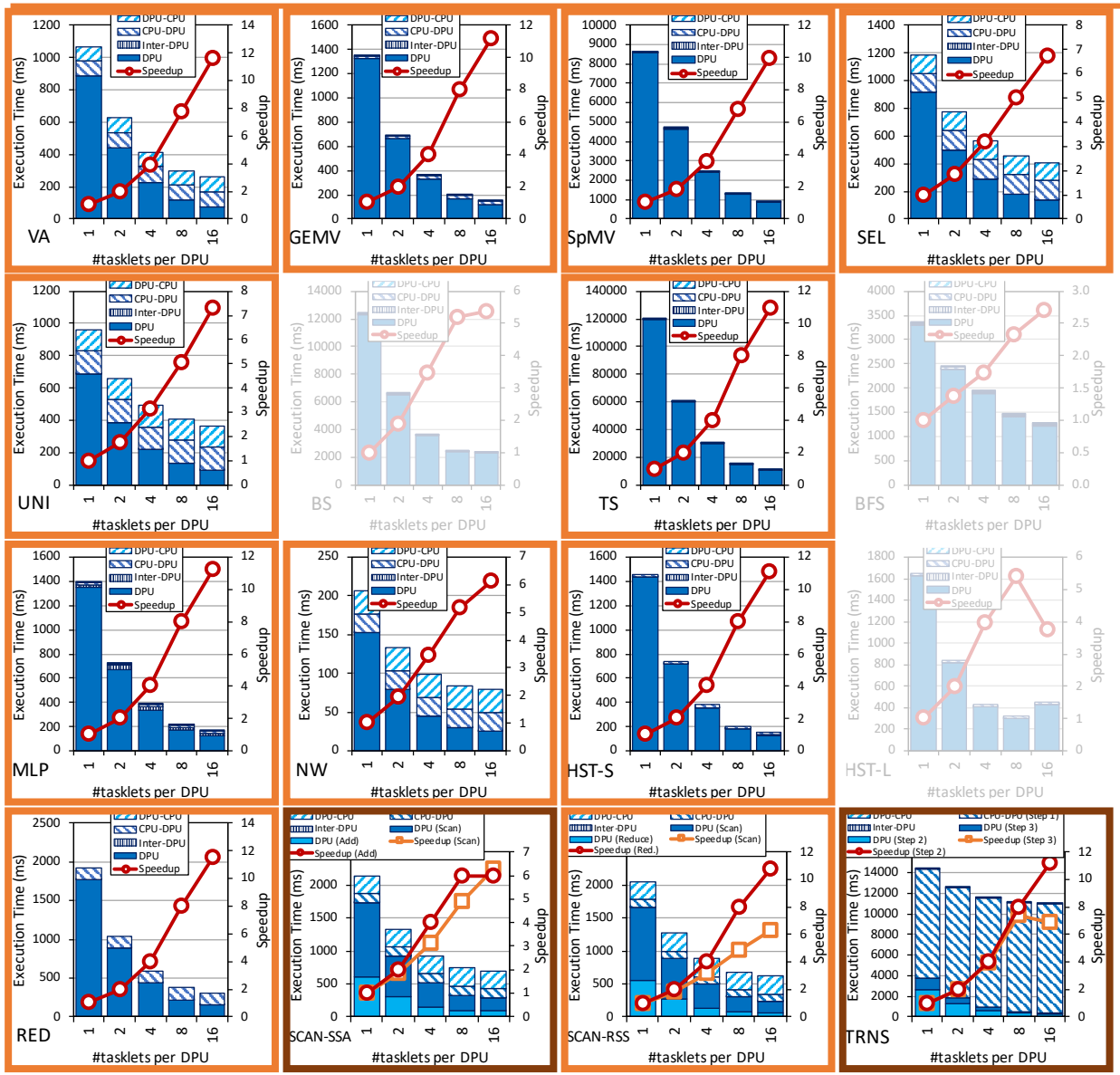

VA, GEMV, SpMV, SEL, UNI, TS, MLP, NW, HST-S, RED, SCAN-SSA (Scan kernel), SCAN-RSS (both kernels), and TRNS (Step 2 kernel), the best performing number of tasklets is 16

Speedups 1.5-2.0x as we double the number of tasklets from 1 to 8. Speedups 1.2-1.5x from 8 to 16, since the pipeline throughput saturates at 11 tasklets

KEY OBSERVATION 10

A number of tasklets greater than 11 is a good choice for most real-world workloads we tested (16 kernels out of 19 kernels from 16 benchmarks), as it fully utilizes the DPU's pipeline.

Strong Scaling: 1 DPU (III)

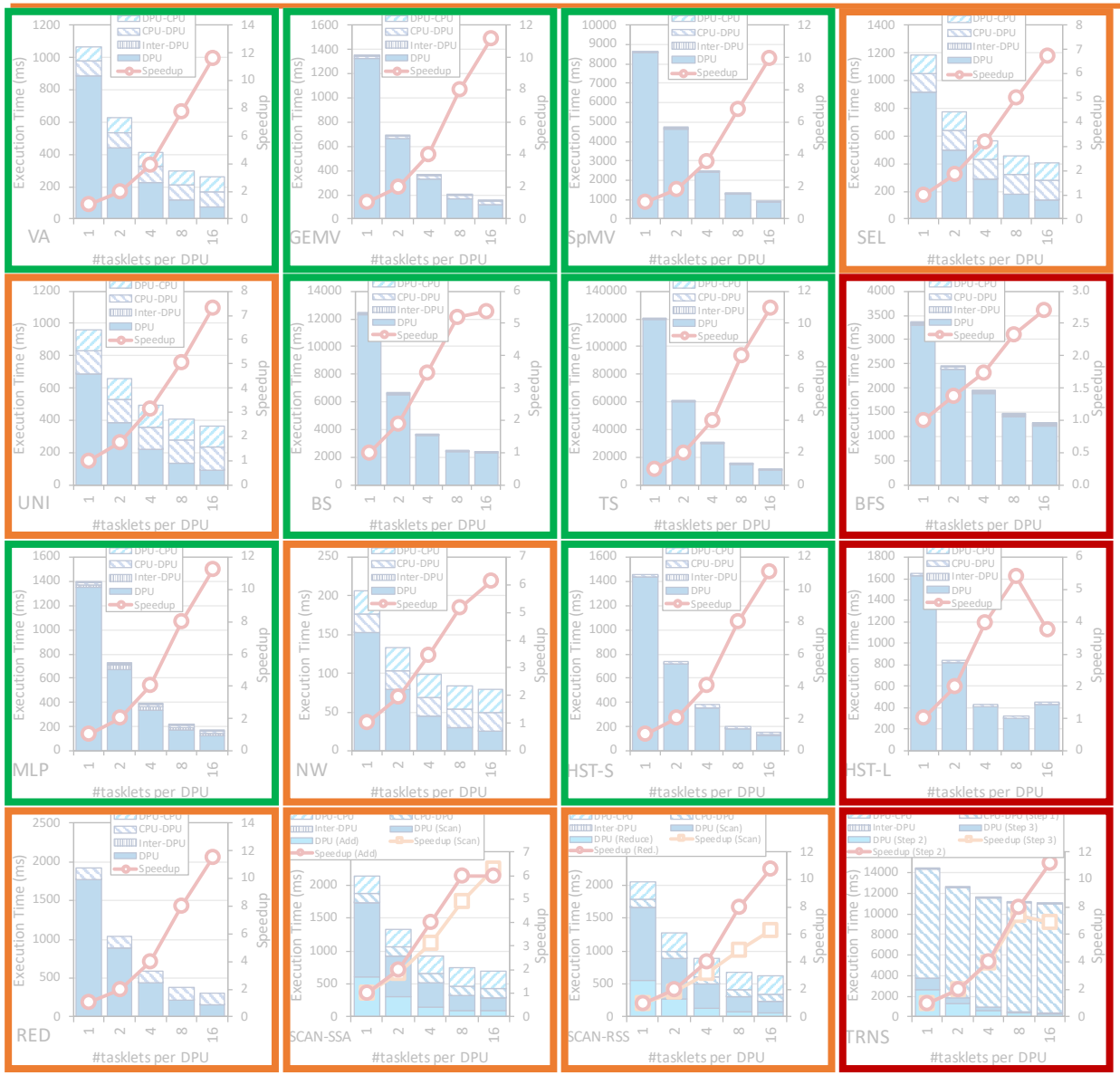

VA, GEMV, SpMV, BS, TS, MLP, HST-S do not use intra-DPU synchronization primitives

In SEL, UNI, NW, RED, SCAN-SSA (Scan kernel), SCAN-RSS (both kernels), synchronization is lightweight

BFS, HST-L, TRNS (Step 3) use mutexes, which cause contention when accessing shared data structures

Strong Scaling: 1 DPU (IV)

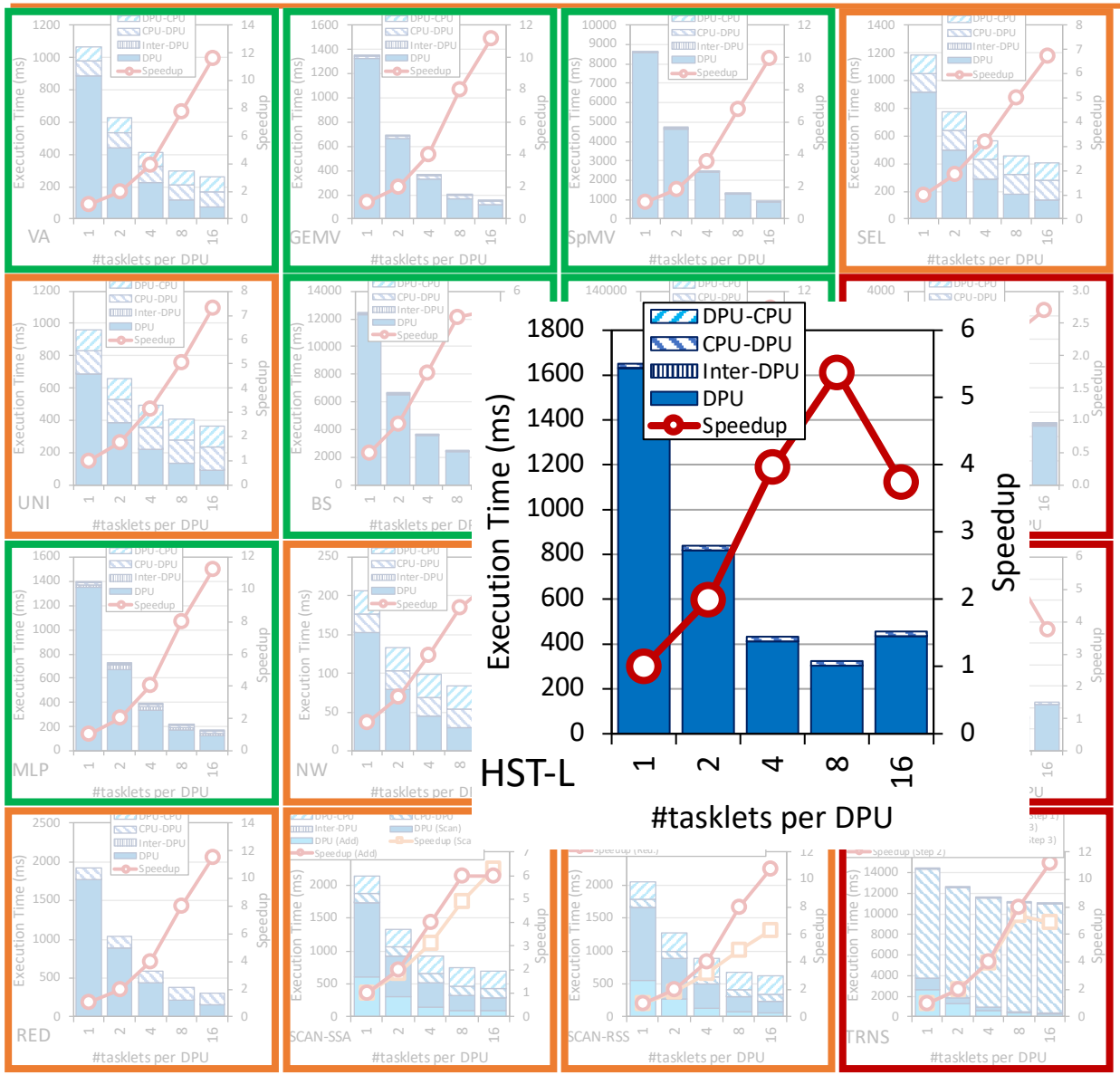

VA, GEMV, SpMV, BS, TS, MLP, HST-S do not use intra-DPU synchronization primitives

In SEL, UNI, NW, RED, SCAN-SSA (Scan kernel), SCAN-RSS (both kernels), synchronization is lightweight

BFS, HST-L, TRNS (Step 3) use mutexes, which cause contention when accessing shared data structures

KEY OBSERVATION 11

Intensive use of **intra-DPU synchronization across tasklets (e.g., mutexes, barriers, handshakes) may limit scalability**, sometimes causing the best performing number of tasklets to be lower than 11.

Strong Scaling: 1 DPU (V)

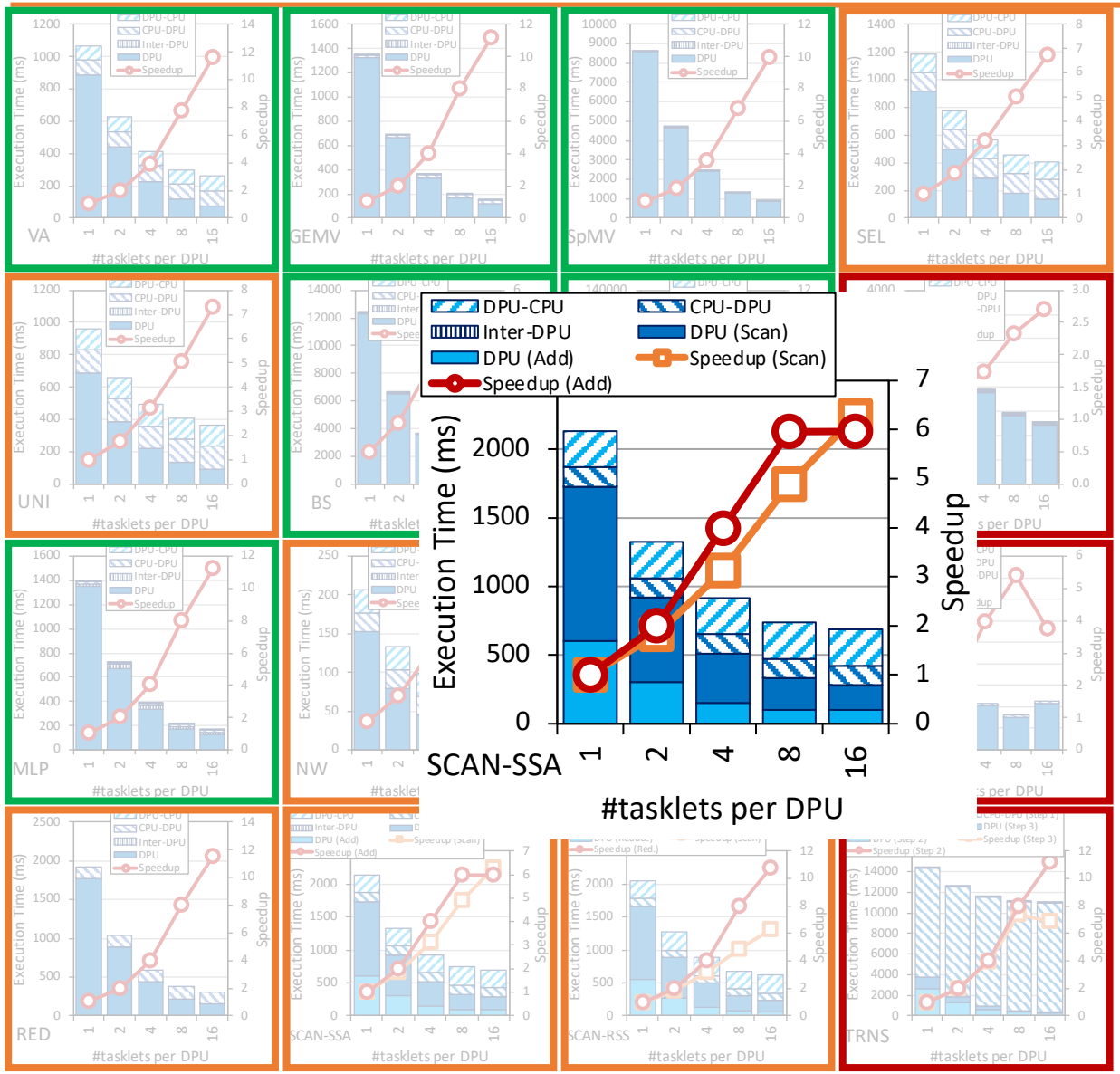

SCAN-SSA (Add kernel) is not compute-intensive. Thus, performance saturates with less that 11 tasklets (recall STREAM ADD).
BS shows similar behavior

KEY OBSERVATION 12

Most real-world workloads are in the compute-bound region of the DPU (all kernels except SCAN-SSA (Add kernel) and BS), i.e., the pipeline latency dominates the MRAM access latency.

Strong Scaling: 1 DPU (VI)

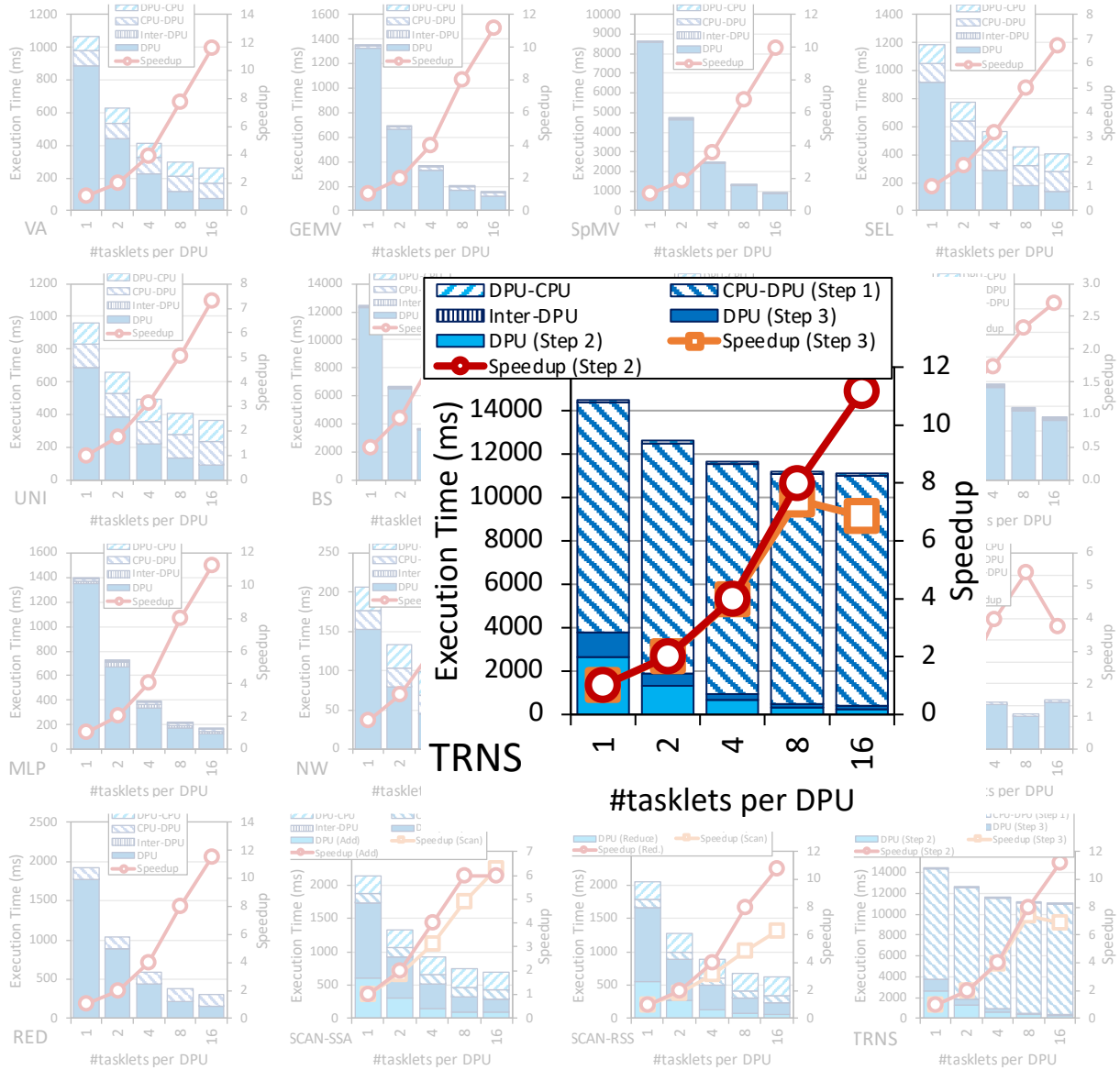

The amount of time spent on CPU-DPU and DPU-CPU transfers is low compared to the time spent on DPU execution

TRNS performs step 1 of the matrix transposition via the CPU-DPU transfer.
Using small transfers (8 elements) does not exploit full CPU-DPU bandwidth

KEY OBSERVATION 13

Transferring large data chunks from/to the host CPU is preferred for input data and output results due to higher sustained CPU-DPU/DPU-CPU bandwidths.

Strong Scaling: 1 Rank (I)

- Strong scaling experiments on 1 rank
  - We set the number of tasklets to the best performing one
  - The number of DPUs is 1, 4, 16, 64
  - We show the breakdown of execution time:
    - DPU: Execution time on the DPU
    - Inter-DPU: Time for inter-DPU communication via the host CPU
    - CPU-DPU: Time for CPU to DPU transfer of input data
    - DPU-CPU: Time for DPU to CPU transfer of final results
  - Speedup over 1 DPU

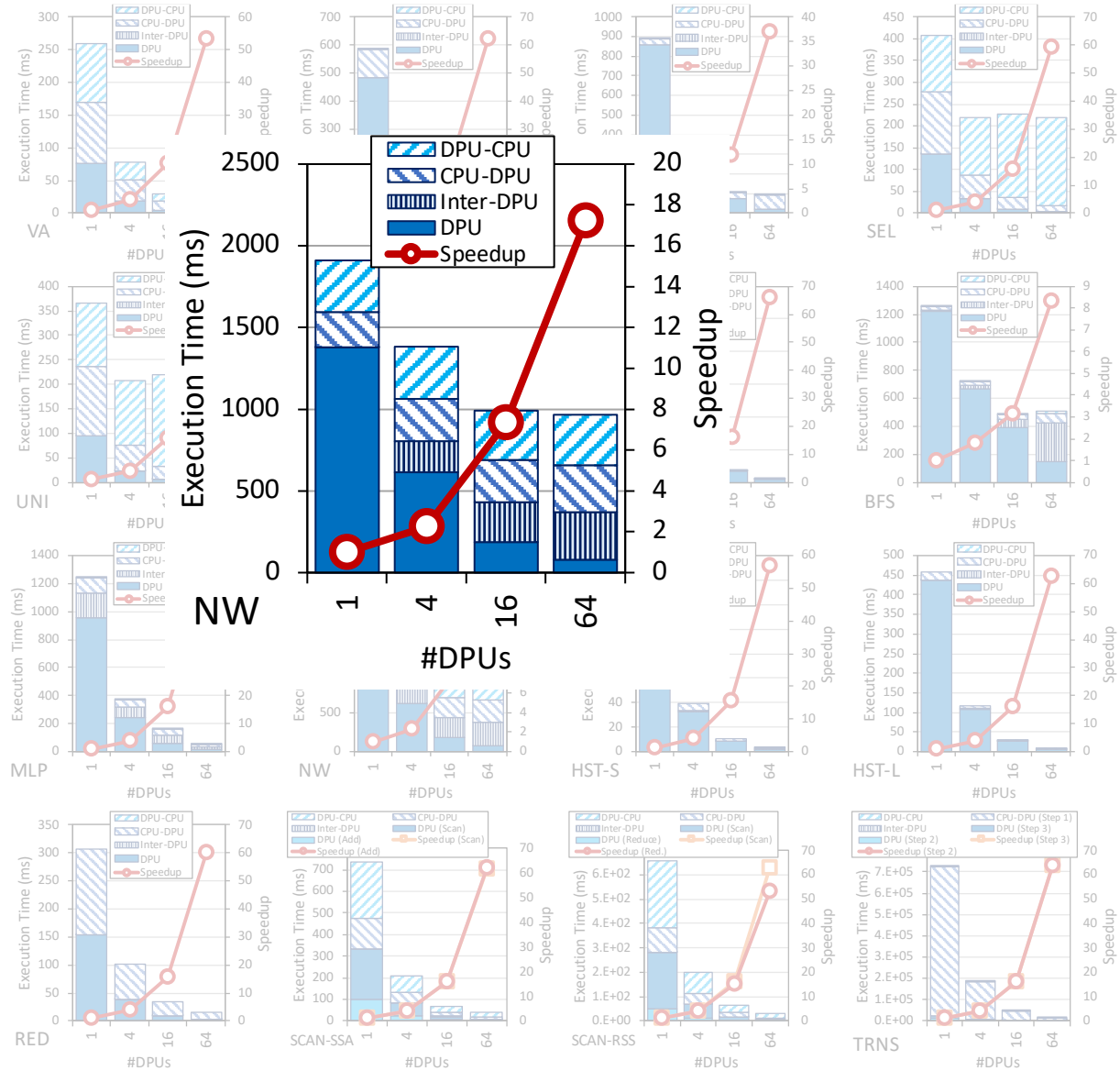

Strong Scaling: 1 Rank (II)

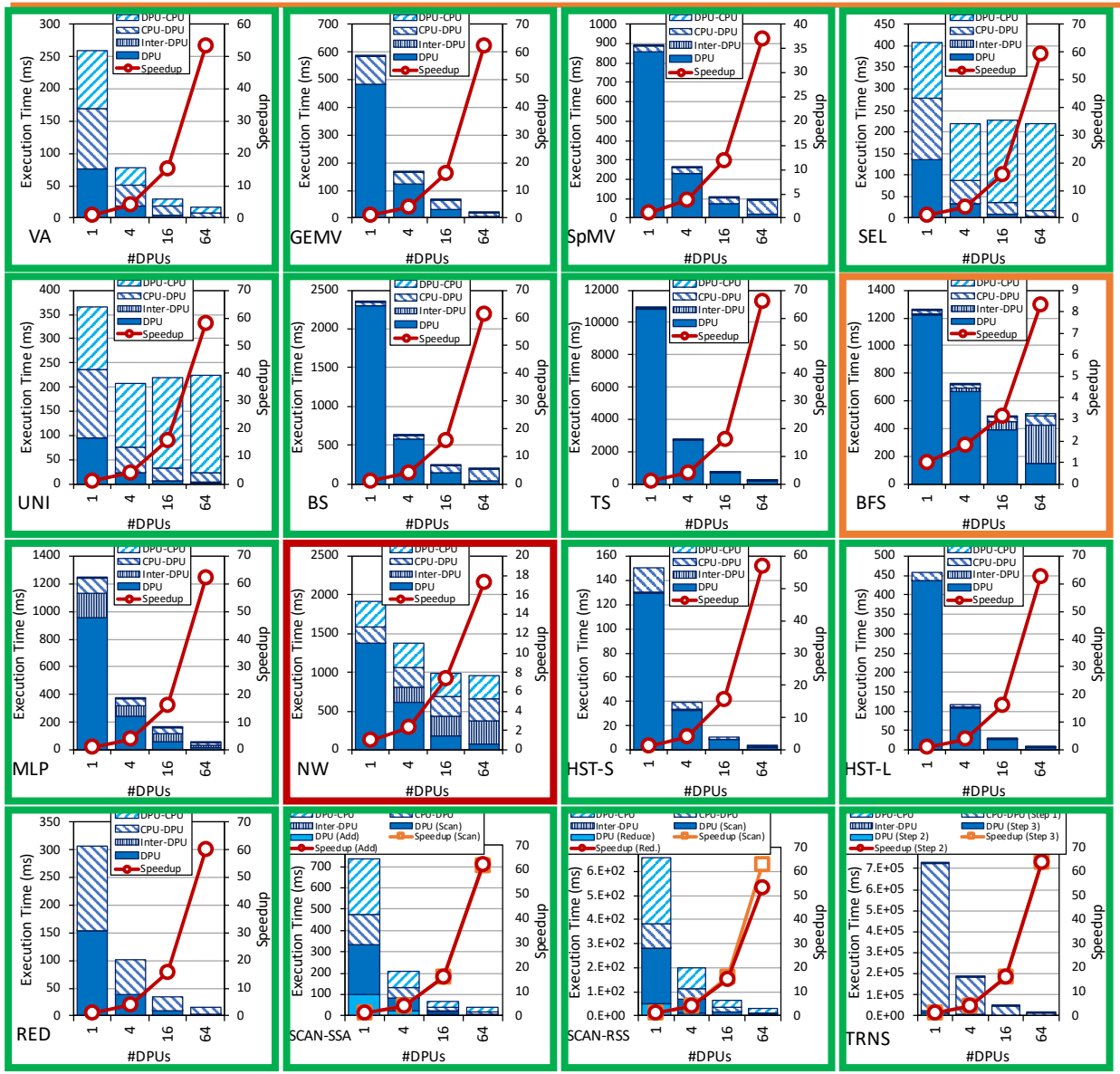

VA, GEMV, SpMV, SEL, UNI, BS, TS, MLP, HST-S, HSTS-L, RED, SCAN-SSA (both kernel), SCAN-RSS (both kernels), and TRNS (both kernels) scale linearly with the number of DPUs

Scaling is sublinear for BFS and NW

BFS suffers load imbalance due to irregular graph topology

NW computes a diagonal of a 2D matrix in each iteration. More DPUs does not mean more parallelization in shorter diagonals.

Strong Scaling: 1 Rank (III)

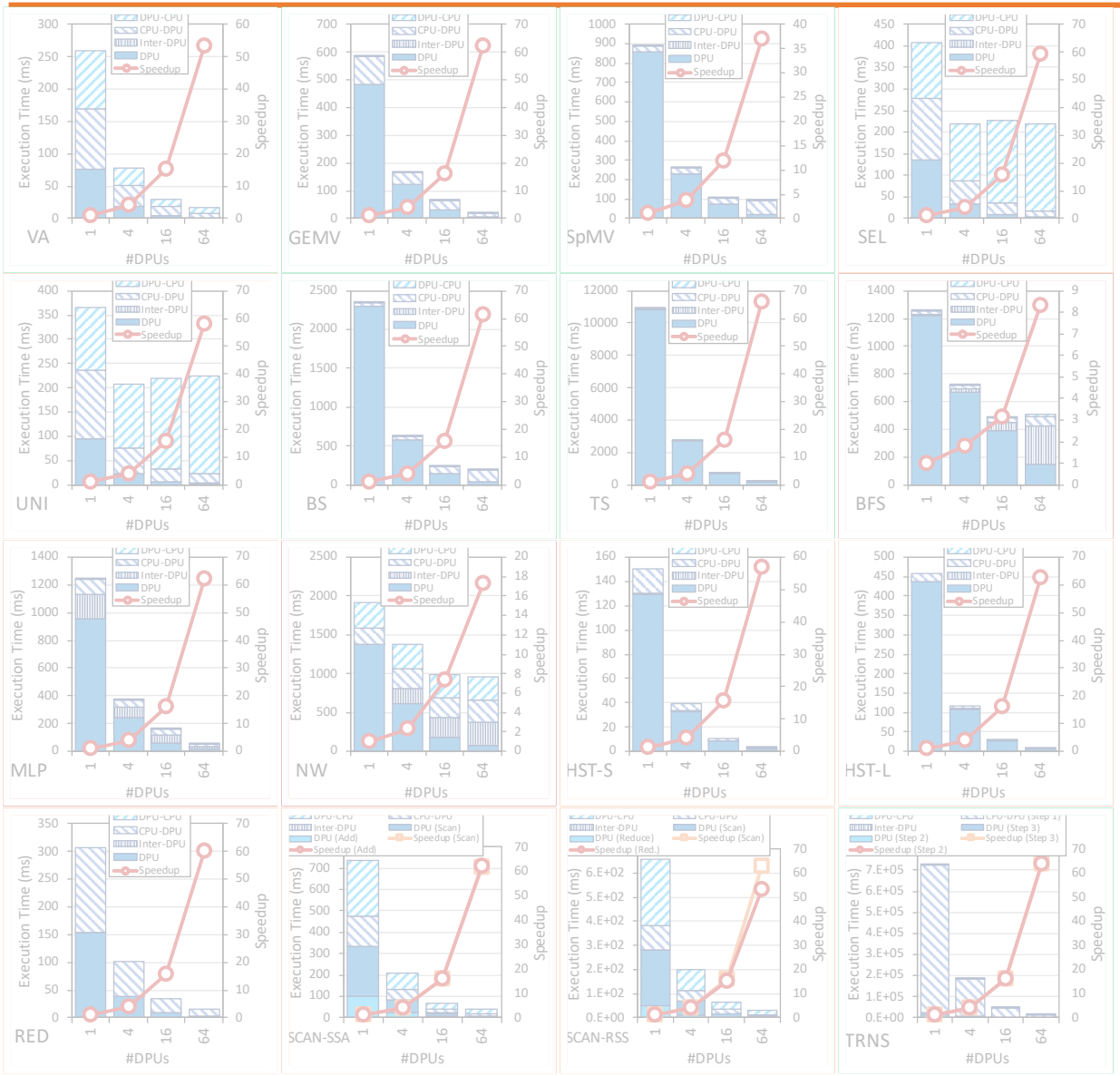

VA, GEMV, SpMV, BS, TS, TRNS do not need inter-DPU synchronization

SEL, UNI, HST-S, HST-L, RED, SCAN-SSA, SCAN-RSS need inter-DPU synchronization but 64 DPUs still obtain the best performance

BFS, MLP, NW require heavy inter-DPU synchronization, involving DPU-CPU and CPU-DPU transfers

Strong Scaling: 1 Rank (IV)

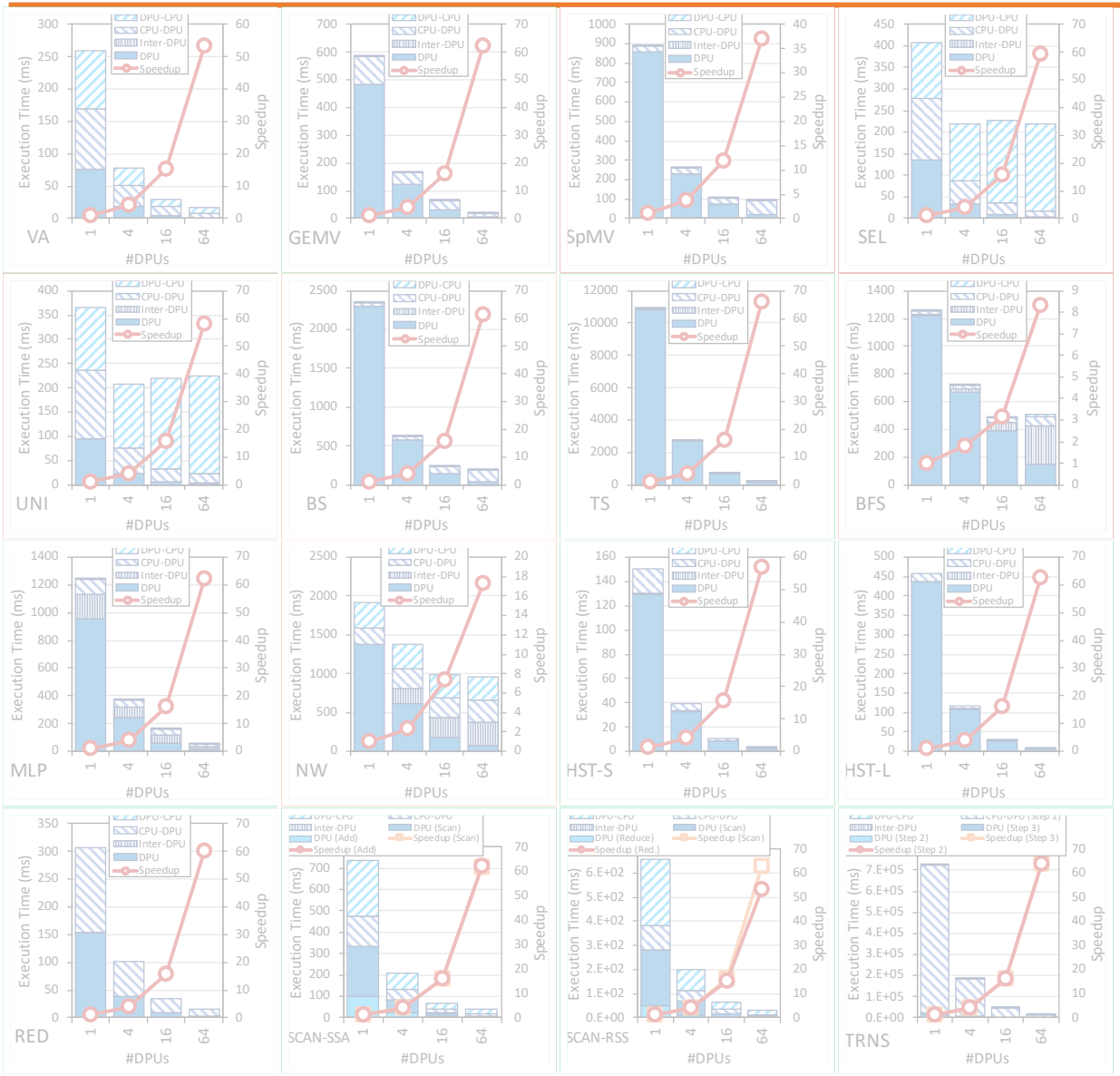

VA, GEMV, TS, MLP, HST-S, HST-L, RED, SCAN-SSA, SCAN-RSS, TRNS use parallel transfers.
CPU-DPU and DPU-CPU transfer times decrease as we increase the number of DPUs

BS, NW use parallel transfers but do not reduce transfer times:

- BS transfers a complete array to all DPUs.
- NW does not use all DPUs in all iterations

SpMV, SEL, UNI, BFS cannot use parallel transfers, as the transfer size per DPU is not fixed

PROGRAMMING RECOMMENDATION 5

Parallel CPU-DPU/DPU-CPU transfers inside a rank of DPUs are recommended for real-world workloads when all transferred buffers are of the same size.

Strong Scaling: 32 Ranks (I)

- Strong scaling experiments on 32 rank
  - We set the number of tasklets to the best performing one
  - The number of DPUs is 256, 512, 1024, 2048
  - We show the breakdown of execution time:
    - DPU: Execution time on the DPU
    - Inter-DPU: Time for inter-DPU communication via the host CPU
    - We do not show CPU-DPU/DPU-CPU transfer times
  - Speedup over 256 DPUs

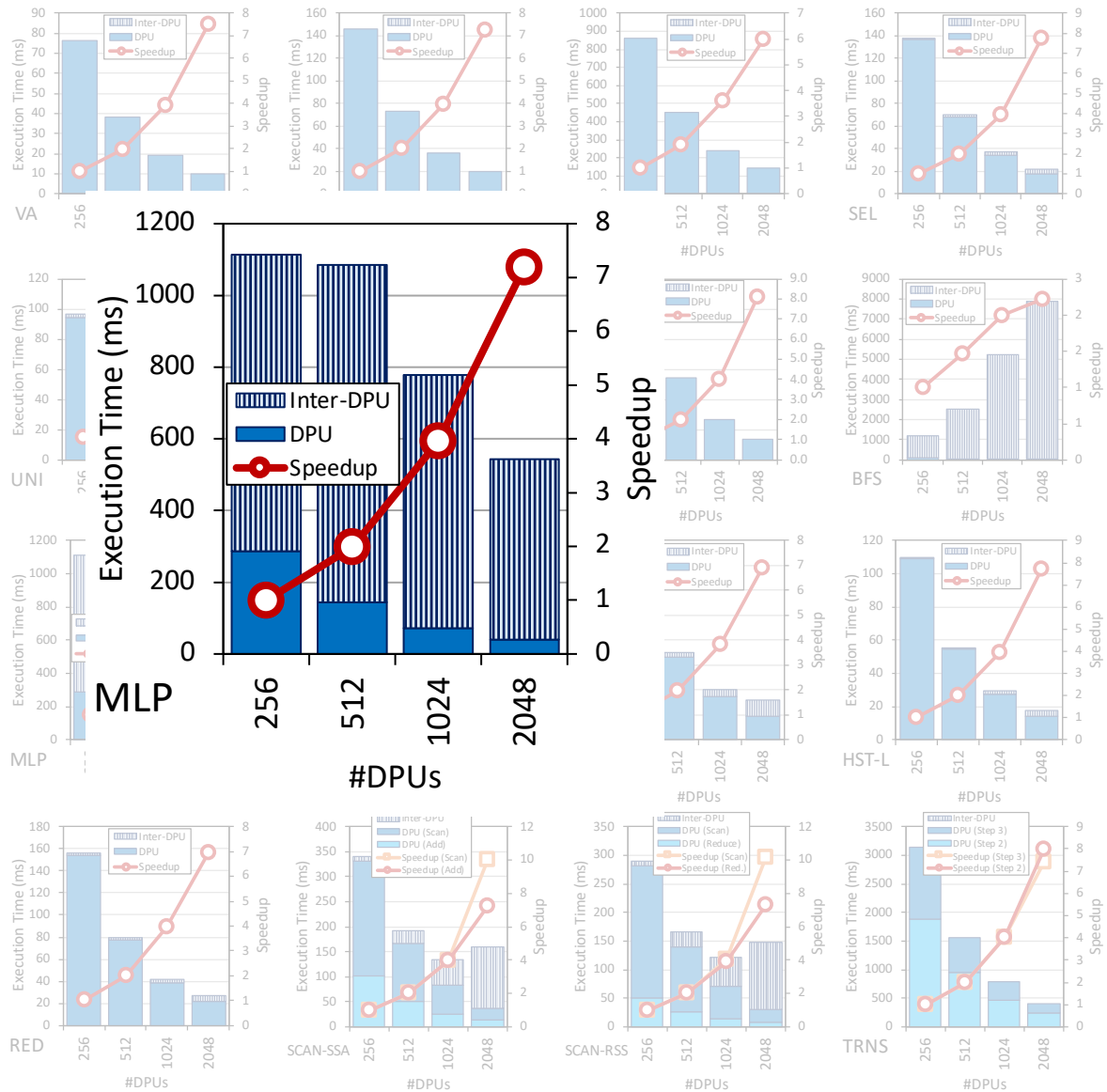

Strong Scaling: 32 Ranks (II)

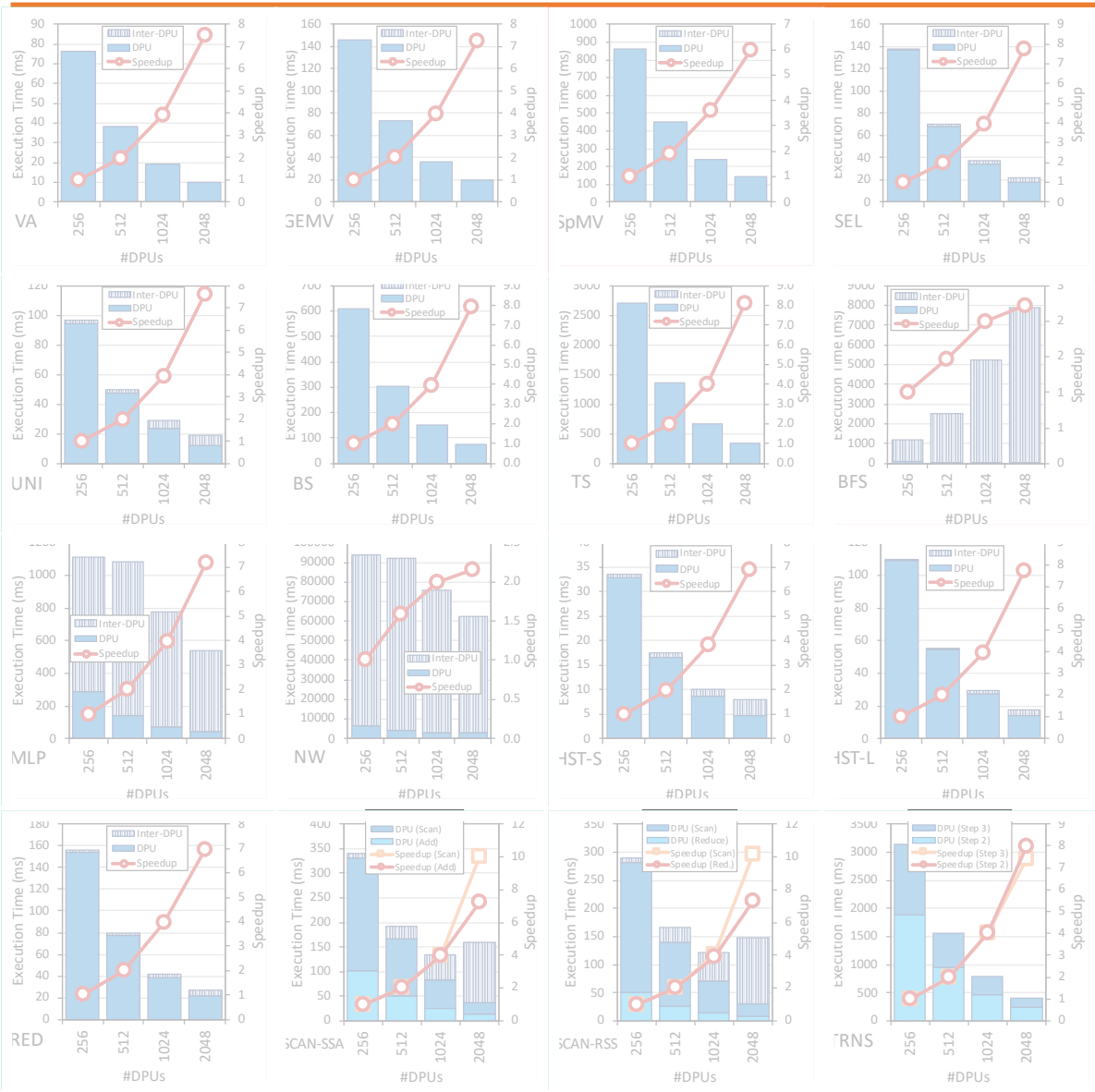

VA, GEMV, SEL, UNI, BS, TS, MLP, HST-S, HSTS-L, RED, SCAN-SSA (both kernel), SCAN-RSS (both kernels), and TRNS (both kernels) scale linearly with the number of DPUs

SpMV, BFS, NW do not scale linearly due to load imbalance

KEY OBSERVATION 14

Load balancing across DPUs ensures linear reduction of the execution time spent on the DPUs for a given problem size, when all available DPUs are used (as observed in strong scaling experiments).

Strong Scaling: 32 Ranks (III)

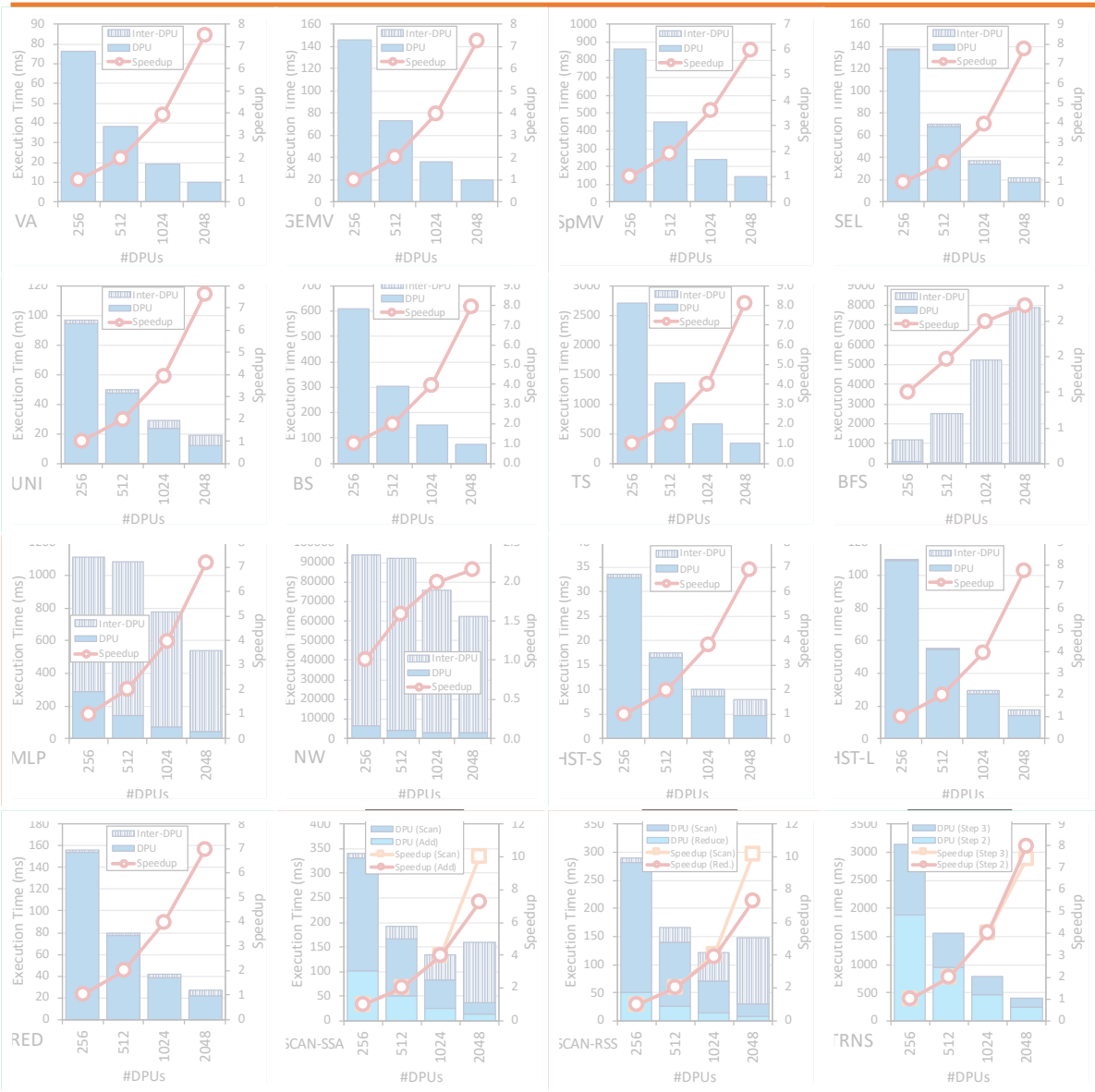

SEL, UNI, HST-S, HST-L, RED only need to merge final results

KEY OBSERVATION 15

The overhead of merging partial results from DPUs in the host CPU is tolerable across all PrIM benchmarks that need it.

BFS, MLP, NW, SCAN-SSA, SCAN-RSS have more complex communication

KEY OBSERVATION 16

Complex synchronization across DPUs (i.e., inter-DPU synchronization involving two-way communication with the host CPU) imposes significant overhead, which limits scalability to more DPUs.

Weak Scaling: 1 Rank

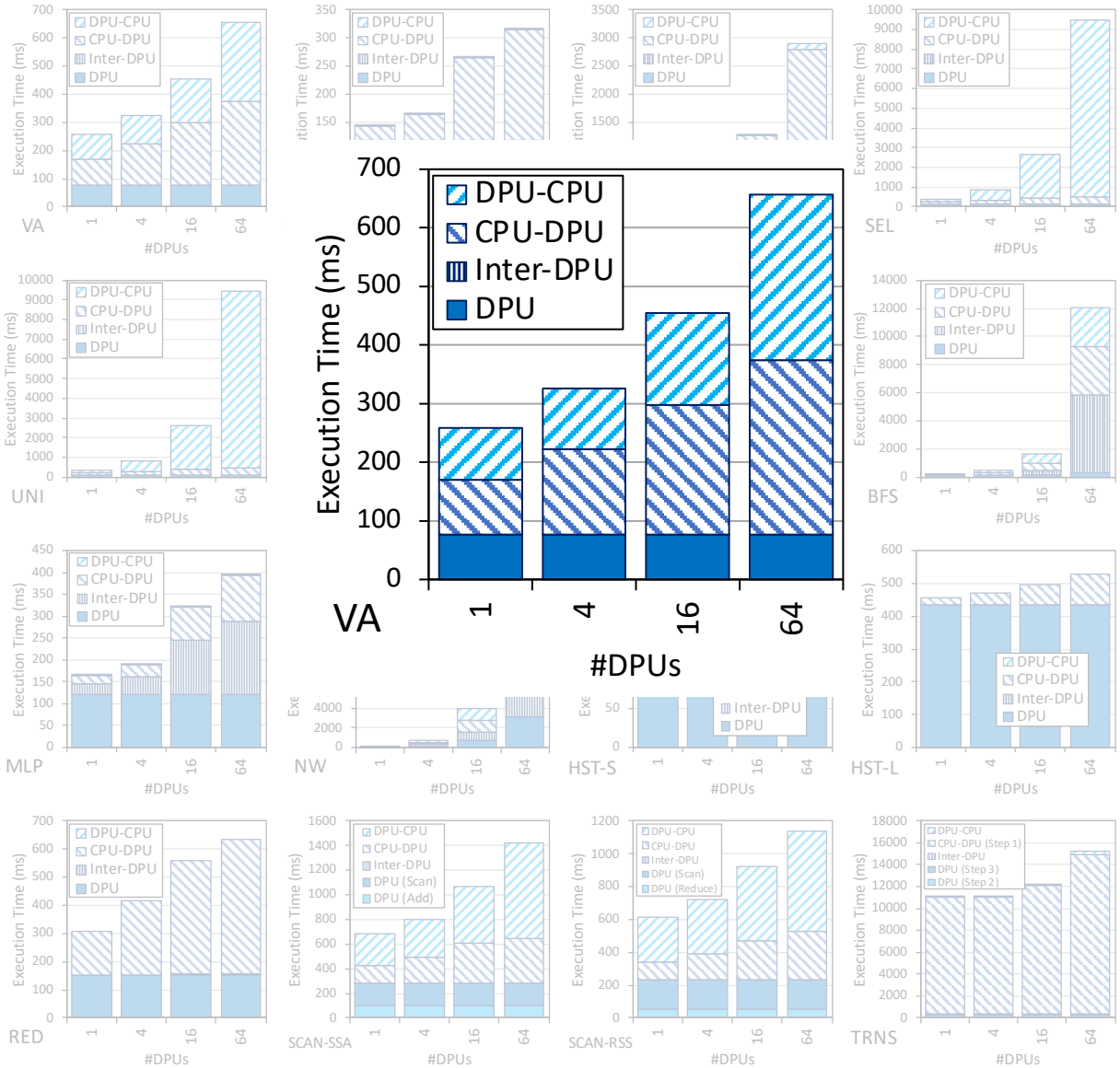

KEY OBSERVATION 17

Equally-sized problems assigned to different DPUs and little/no inter-DPU synchronization lead to linear weak scaling of the execution time spent on the DPUs (i.e., constant execution time when we increase the number of DPUs and the dataset size accordingly).

KEY OBSERVATION 18

Sustained bandwidth of parallel CPU-DPU/DPU-CPU transfers inside a rank of DPUs increases sublinearly with the number of DPUs.

CPU/GPU: Evaluation Methodology

- Comparison of both UPMEM-based PIM systems to state-of-the-art CPU and GPU
  - Intel Xeon E3-1240 CPU
  - NVIDIA Titan V GPU
- We use state-of-the-art CPU and GPU counterparts of PrIM benchmarks
  - https://github.com/CMU-SAFARI/prim-benchmarks
- We use the largest dataset that we can fit in the GPU memory
- We show overall execution time, including DPU kernel time and inter DPU communication

CPU/GPU: Performance Comparison (I)

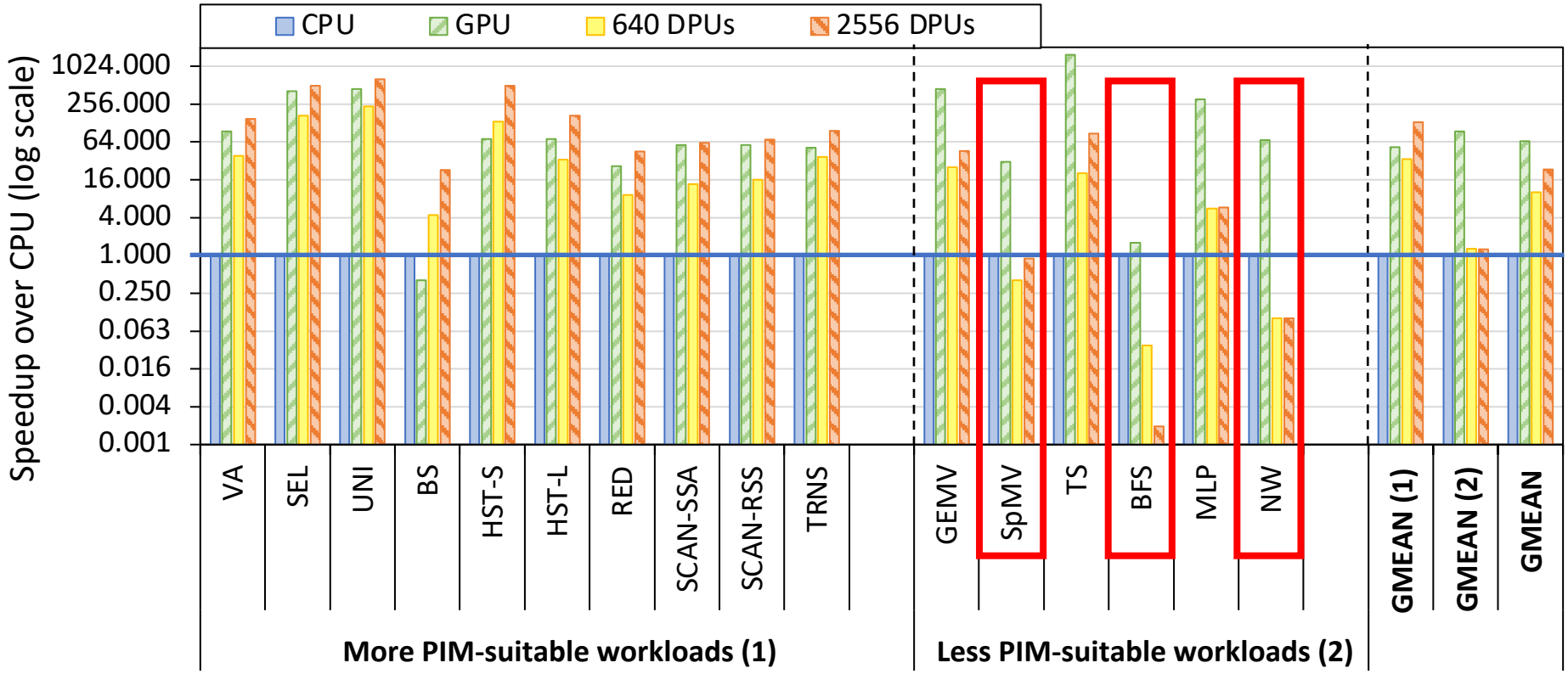

The 2,556-DPU and the 640-DPU systems outperform the CPU for all benchmarks except SpMV, BFS, and NW

The 2,556-DPU and the 640-DPU are, respectively, 93.0x and 27.9x faster than the CPU for 13 of the PrIM benchmarks

CPU/GPU: Performance Comparison (II)

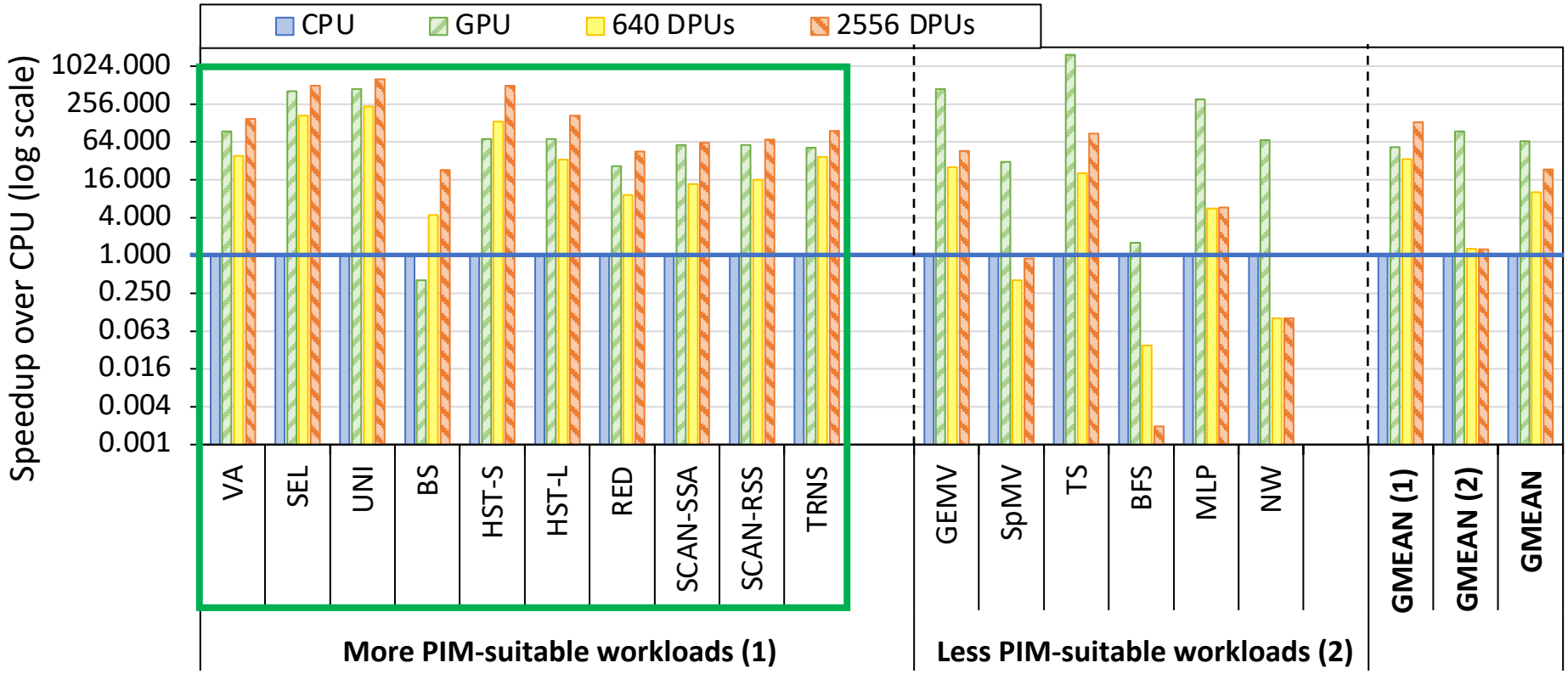

The 2,556-DPU outperforms the GPU for 10 PrIM benchmarks with an average of 2.54x

The performance of the 640-DPU is within 65% the performance of the GPU for the same 10 PrIM benchmarks

CPU/GPU: Performance Comparison (III)

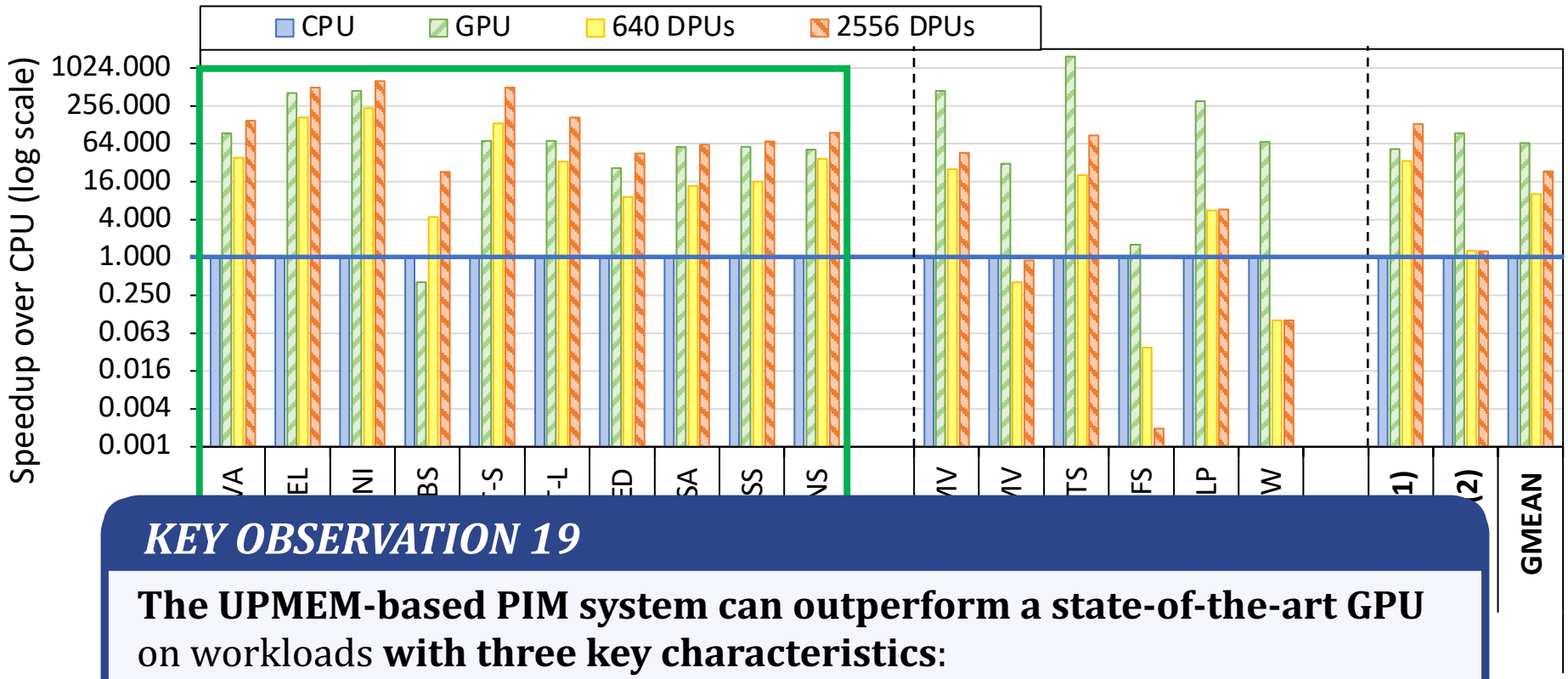

KEY OBSERVATION 19

The UPMEM-based PIM system can outperform a state-of-the-art GPU on workloads **with three key characteristics**:

1. Streaming memory accesses
2. No or little inter-DPU synchronization
3. No or little use of integer multiplication, integer division, or floating point operations

These three key characteristics make a **workload potentially suitable to the UPMEM PIM architecture**.

CPU/GPU: Energy Comparison (I)

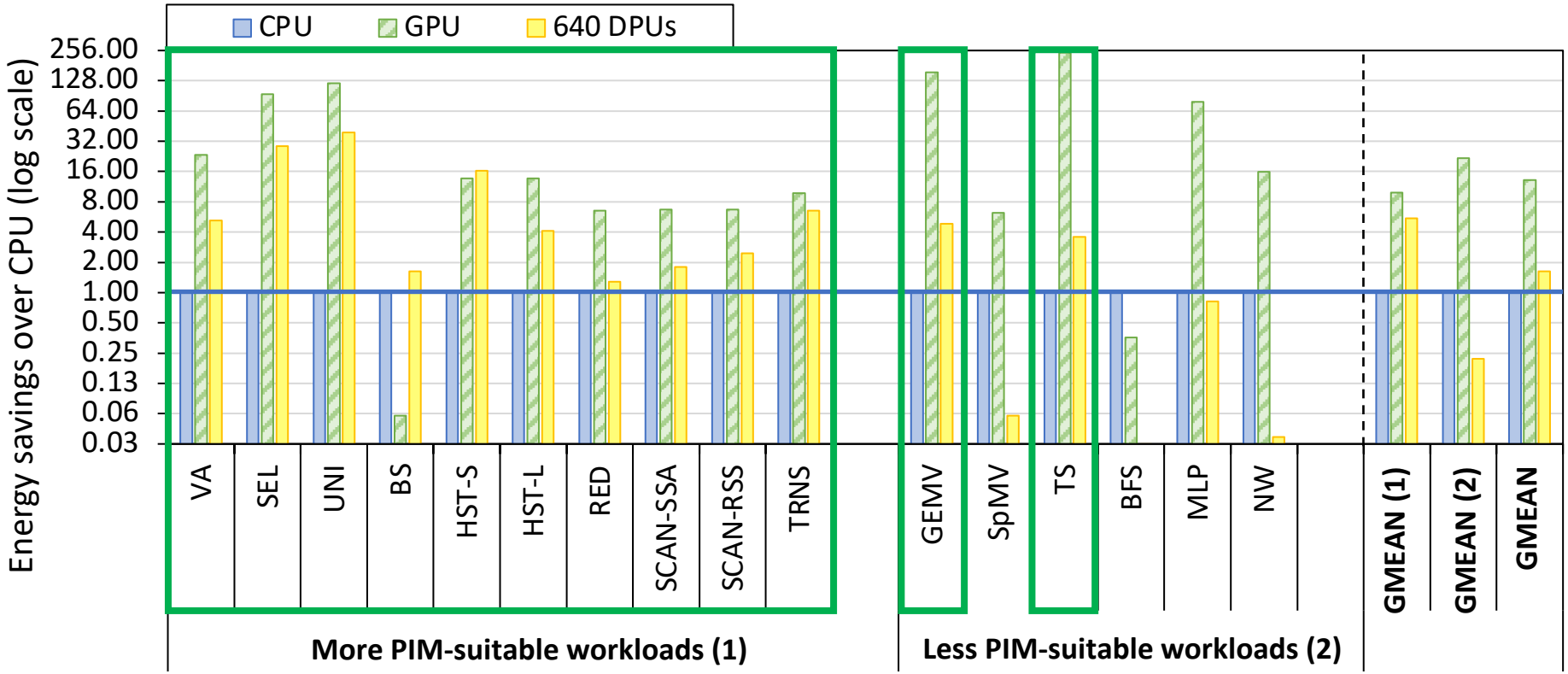

The 640-DPU system consumes on average 1.64x less energy than the CPU for all 16 PrIM benchmarks

For 12 benchmarks, the 640-DPU system provides energy savings of 5.23x over the CPU

CPU/GPU: Energy Comparison (II)

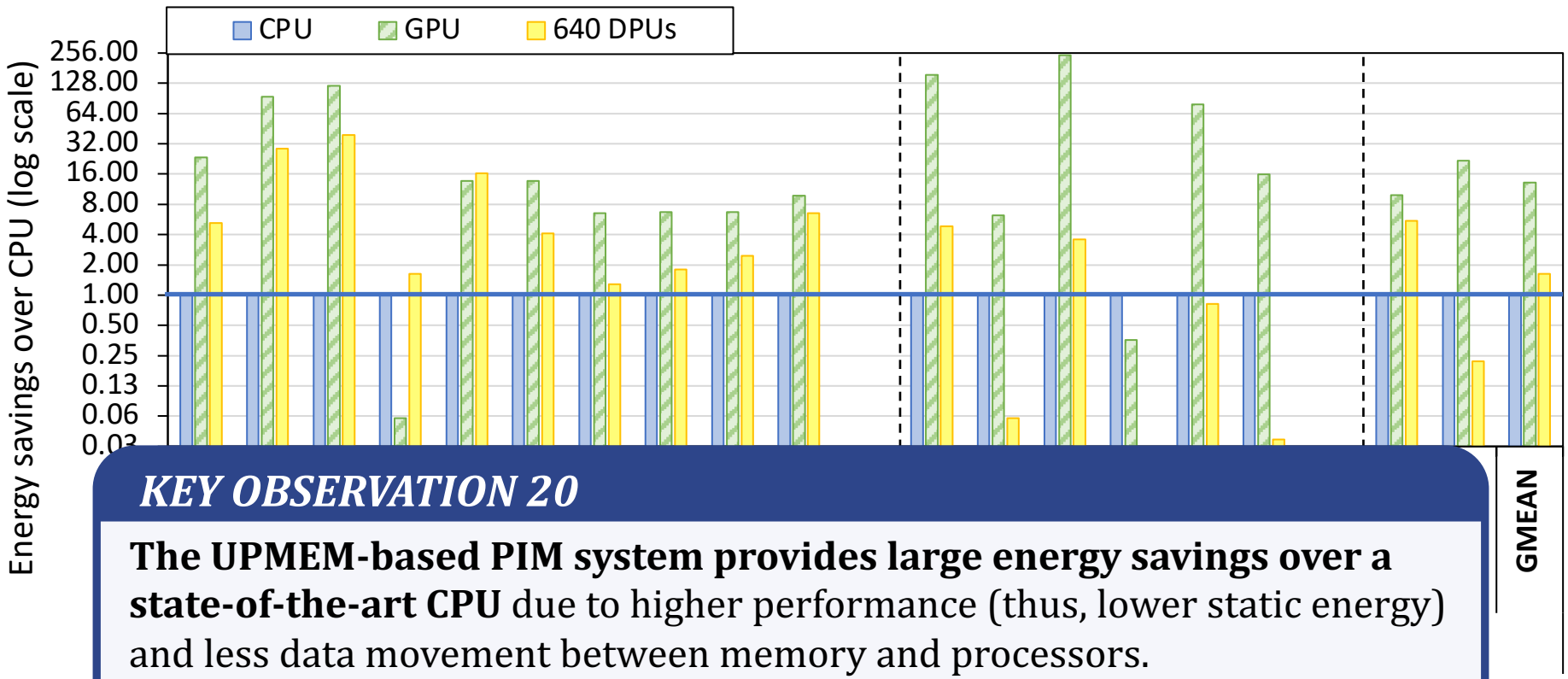

KEY OBSERVATION 20

The UPMEM-based PIM system provides large energy savings over a state-of-the-art CPU due to higher performance (thus, lower static energy) and less data movement between memory and processors.

The UPMEM-based PIM system provides energy savings over a state-of-the-art CPU/GPU on workloads where it outperforms the CPU/GPU. This is because the source of both performance improvement and energy savings is the same: **the significant reduction in data movement between the memory and the processor cores**, which the UPMEM-based PIM system can provide for PIM-suitable workloads.

Outline

- Introduction
  - Accelerator Model
  - UPMEM-based PIM System Overview
- UPMEM PIM Programming
  - Vector Addition
  - CPU-DPU Data Transfers
  - Inter-DPU Communication
  - CPU-DPU/DPU-CPU Transfer Bandwidth
- DRAM Processing Unit
  - Arithmetic Throughput
  - WRAM and MRAM Bandwidth
- PrIM Benchmarks
  - Roofline Model
  - Benchmark Diversity
- Evaluation
  - Strong and Weak Scaling
  - Comparison to CPU and GPU
- Key Takeaways

Key Takeaway 1

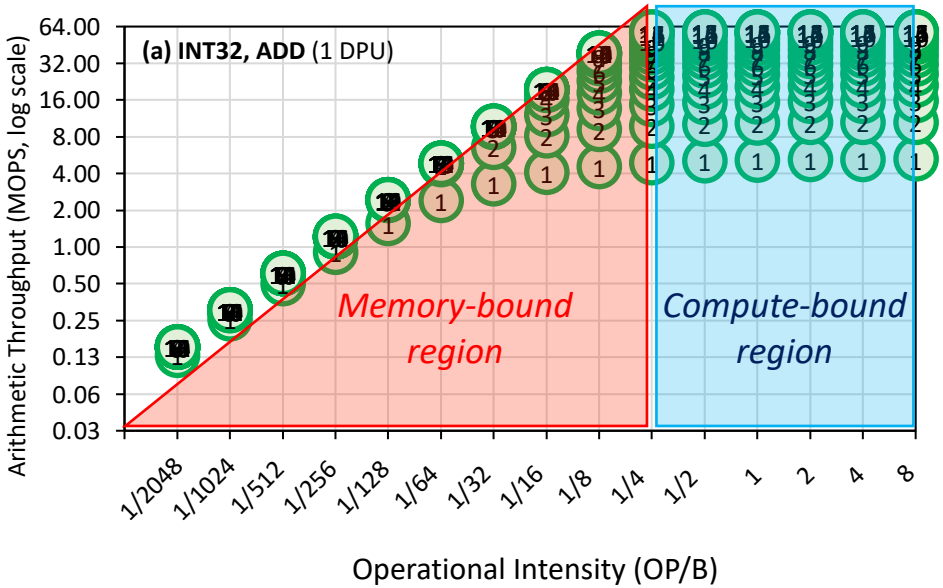

The throughput saturation point is as low as ¼ OP/B, i.e., 1 integer addition per every 32-bit element fetched

KEY TAKEAWAY 1

The UPMEM PIM architecture is fundamentally compute bound. As a result, **the most suitable workloads are memory-bound.**

Key Takeaway 2

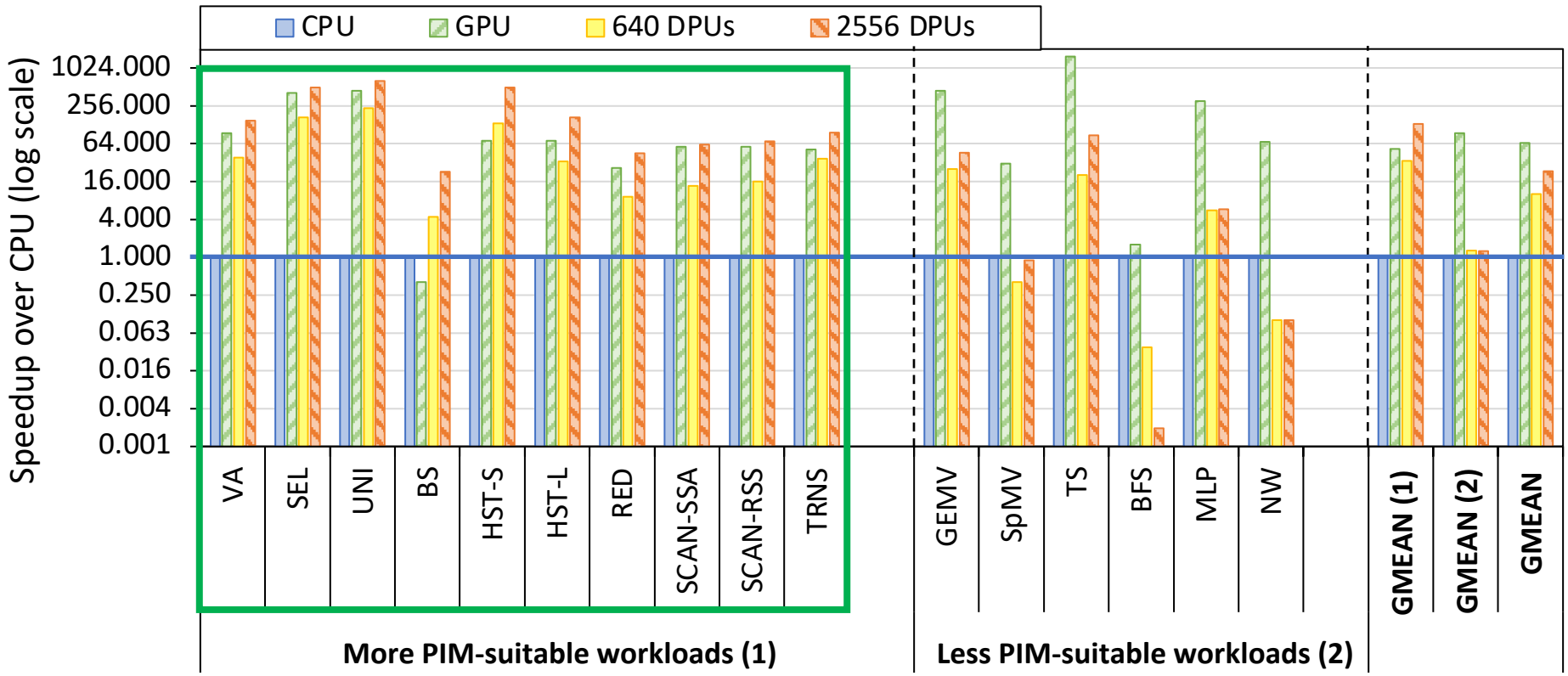

KEY TAKEAWAY 2

The most well-suited workloads for the UPMEM PIM architecture use no arithmetic operations or use only simple operations (e.g., bitwise operations and integer addition/subtraction).

Key Takeaway 3

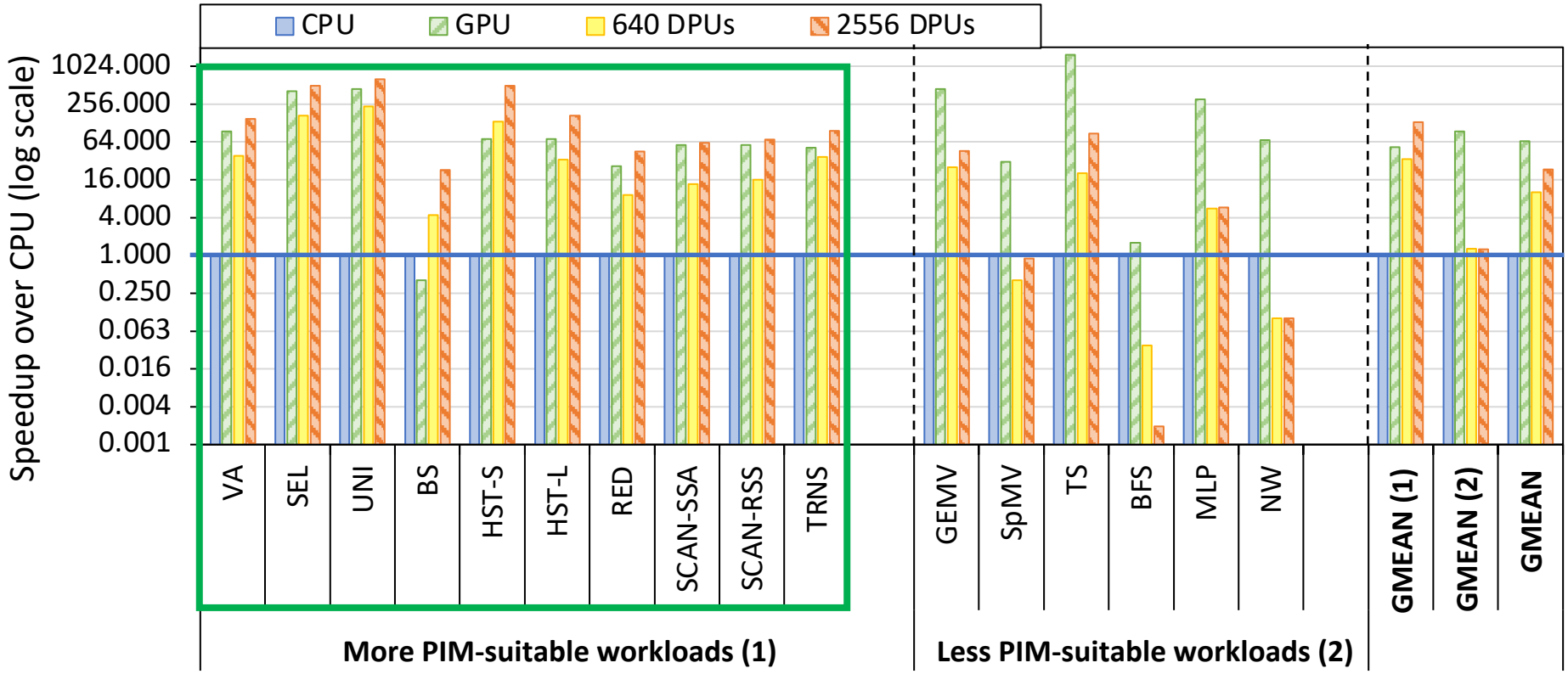

KEY TAKEAWAY 3

The most well-suited workloads for the UPMEM PIM architecture require little or no communication across DPUs (inter-DPU communication).

Key Takeaway 4

KEY TAKEAWAY 4

- UPMEM-based PIM systems **outperform state-of-the-art CPUs in terms of performance** (by 23.2× on 2,556 DPUs for 16 PrIM benchmarks) **and energy efficiency on most of PrIM benchmarks.**

- UPMEM-based PIM systems **outperform state-of-the-art GPUs on a majority of PrIM benchmarks** (by 2.54× on 2,556 DPUs for 10 PrIM benchmarks), and the outlook is even more positive for future PIM systems.

- UPMEM-based PIM systems are **more energy-efficient than state-of-the-art CPUs and GPUs on workloads that they provide performance improvements** over the CPUs and the GPUs.

Understanding a Modern PIM Architecture

Benchmarking a New Paradigm: Experimental Analysis and Characterization of a Real Processing-in-Memory System

JUAN GÓMEZ-LUNA[1], IZZAT EL HAJJ[2], IVAN FERNANDEZ[1,3], CHRISTINA GIANNOULA[1,4], GERALDO F. OLIVEIRA[1], AND ONUR MUTLU[1]

[1]ETH Zürich
[2]American University of Beirut
[3]University of Malaga
[4]National Technical University of Athens

Corresponding author: Juan Gómez-Luna (e-mail: juang@ethz.ch).

https://arxiv.org/pdf/2105.03814.pdf

https://github.com/CMU-SAFARI/prim-benchmarks

Short arXiv Version

Benchmarking Memory-Centric Computing Systems: Analysis of Real Processing-in-Memory Hardware

Juan Gómez-Luna, *ETH Zürich*
Izzat El Hajj, *American University of Beirut*
Ivan Fernandez, *University of Malaga*
Christina Giannoula, *National Technical University of Athens*
Geraldo F. Oliveira, *ETH Zürich*
Onur Mutlu, *ETH Zürich*

https://arxiv.org/pdf/2110.01709.pdf
https://github.com/CMU-SAFARI/prim-benchmarks

Long arXiv Version

Benchmarking a New Paradigm: An Experimental Analysis of a Real Processing-in-Memory Architecture

Juan Gómez-Luna[1] Izzat El Hajj[2] Ivan Fernandez[1,3] Christina Giannoula[1,4]
Geraldo F. Oliveira[1] Onur Mutlu[1]

[1]ETH Zürich [2]American University of Beirut [3]University of Malaga [4]National Technical University of Athens

https://arxiv.org/pdf/2105.03814.pdf

https://github.com/CMU-SAFARI/prim-benchmarks

PrIM Repository

- All microbenchmarks, benchmarks, and scripts
- https://github.com/CMU-SAFARI/prim-benchmarks

CMU-SAFARI / prim-benchmarks

Unwatch 2 | Star 2 | Fork 1

Code | Issues | Pull requests | Actions | Projects | Wiki | Security | Insights | Settings

main | prim-benchmarks / README.md | Go to file

Juan Gomez Luna PrIM -- first commit | Latest commit 3de4b49 9 days ago | History

1 contributor

168 lines (132 sloc) | 5.79 KB | Raw | Blame

PrIM (Processing-In-Memory Benchmarks)

PrIM is the first benchmark suite for a real-world processing-in-memory (PIM) architecture. PrIM is developed to evaluate, analyze, and characterize the first publicly-available real-world processing-in-memory (PIM) architecture, the UPMEM PIM architecture. The UPMEM PIM architecture combines traditional DRAM memory arrays with general-purpose in-order cores, called DRAM Processing Units (DPUs), integrated in the same chip.

PrIM provides a common set of workloads to evaluate the UPMEM PIM architecture with and can be useful for programming, architecture and system researchers all alike to improve multiple aspects of future PIM hardware and software. The workloads have different characteristics, exhibiting heterogeneity in their memory access patterns, operations and data types, and communication patterns. This repository also contains baseline CPU and GPU implementations of PrIM benchmarks for comparison purposes.

PrIm also includes a set of microbenchmarks can be used to assess various architecture limits such as compute throughput and memory bandwidth.

HPCA 2023 Tutorial

Real-world Processing-in-Memory Architectures

Processing-Near-Memory

Real PNM Architectures

Programming General-purpose PIM

Dr. Juan Gómez Luna

Professor Onur Mutlu

ETH Zürich

SAFARI

Sunday, February 26, 2023